# CLOW CANADA LIST


## ABSTRACT

In this guide, you will find information about our products, product codes, external links to brochures and drawings.

**Hydrants** ..... **4**
M67 / M93 / Monitor & Heritage Brigadier Hydrant Parts List ..... 4
M67 / M93 / Monitor & Heritage Brigadier Hydrant Parts List Cont'd ..... 5
M67B Brigadier Hydrant Drawing ..... 6
McAvity M67 Parts List ..... 7
M67 McAvity Hydrant Drawing ..... 8
D67M Premier Hydrant Parts List ..... 9
D67M Premier Hydrant Parts List – Cont'd ..... 10
D67M – P Premier Hydrant Drawing ..... 11
Concord D67M Parts List ..... 12
Concord D67M Drawing ..... 13
Concord Daigle D67 Parts List ..... 14
Concord Daigle D67 Drawing ..... 15
McAvity 9651 #1 & #2 Parts List ..... 16
McAvity 9651 #1 & #2 Drawing ..... 17
McAvity 9658 Parts List ..... 18
McAvity 9658 Drawing ..... 19
McAvity M59M Parts List ..... 20
McAvity M59M Drawing ..... 21
Bibby Sentinel - Parts List ..... 22
Bibby Sentinel Drawing ..... 23
**Hydrant Parts** ..... **24**
Pumper Nozzles & Pumper Caps for any Clow Hydrant with Threaded Body Nozzle Connections ..... 24
Hose Nozzles & Caps ..... 25
D67M / D67- Premier Variable Parts Options ..... 26
M67 Brigadier / M67 Variable Parts Options ..... 27
Fire Hydrants Extensions ..... 28
Tools Required for Maintenance / Repairs ..... 29
Hydrants Kits and Conversion Kits ..... 30
Inlets Complete ..... 31
M67B Upper & Lower Stem with Main Valve Kits Drawing ..... 32
D67M-P Upper & Lower Stem with Main Valve Kits Drawing ..... 33
Bonnet Assemblies Drawings ..... 34
Drip Valve & Seat Complete ..... 35
Traffic Repairs Kits – With & Without Upper Stem ..... 35
Upper Body Complete – All Models (Assembly below for current production hydrants) ..... 36

Fitted Upper Barrel (Assembly below for current production hydrants) 37
**Resilient Wedge Gate Valves 38**
Resilient Wedge Gate Valves - Product Codes Open Left 38
Fire Protection – Product Codes 38
Clow Resilient Wedge Gate Valve Parts 2" -4" 39
Clow Resilient Wedge Gate Valve Parts 4" -12" 40
Clow Resilient Wedge Gate Valve Parts 14" -16" 41
Non-Rising Stem Resilient Wedge Gage Valve Rebuild Kits 42
**AWWA C504 Butterfly Valves 43**
M&H MODEL 4500 Class 150B / EPDM on 304 SS SEAT / 2" NUT or HANDWHEEL / FUSION EPOXY 43
**Services Boxes 44**
Services Boxes Rods – SS Pins 44
Services Boxes Accessories 45
Service Boxes Drawing 46
**300 SERIES HARNESS STYLE RESTRAINTS 47**
300 SERIES HARNESS STYLE RESTRAINTS – Product details 48
300 SERIES HARNESS STYLE RESTRAINT-RINGS ONLY 48
360 SERIES HARNESS STYLE RESTRAINT-RINGS ONLY 48
**TUFGRIP 49**
TUFGRIP DUAL WEDGE MECHANICAL JOINT RESTRAINT GLAND ONLY 49
TUFGRIP DUAL WEDGE MECHANICAL JOINT RESTRAINT COMPLETE KIT 49
SERIES 40C FLANGE ADAPTORS for DUCTILE IRON PIPE 50
SERIES 90C FLANGE ADAPTORS for PVC PIPE 50
**D50 SEWER SADDLES 51**
D50 PARTS AND "O" RINGS 51
**DAIG-O-PER TAPPING MACHINE 52**
REPLACEMENT PARTS 52
DAIG-O-PER TAPPING MACHINE AND PARTS OPTIONAL EQUIPMENT 53
**CLOW CANADA ULC/FM INDICATOR POSTS LIST 54**
Indicator Posts 2945A 54
McAVITY INDICATOR POSTS EXTENSIONS 55
POST INDICATOR PARTS 55

# HYDRANTS

## M67 / M93 / Monitor & Heritage Brigadier Hydrant Parts List

| QTY | REF | DESCRIPTION | MATERIAL | PROUDUCT CODE |
|---|---|---|---|---|
| 2 | 2 | Hose Nozzle | Copper Alloy | Hose Nozzle Page |
| 2 | 3 | Hose Nozzle Cap | Cast Iron | Hose Cap Page |
| | 4 | Housing Stem "O" Rings | Buna - N | T8100207 |
| 1 | 5 | Hose Cap Chain & "S" Hook 2H1P | Steel Z.P. | R8104345 |
| 1 | 6 | Housing Joint Gasket | Compressed Non-Asbestos | T8107782 |
| 1 | 7 | Oil Hole Screw | Brass | T8100131 |
| 1 | 9 | Operating Nut "O" Ring | Buna - N | T8100210 |
| 1 | 12 | Operating Nut Bearing | Delrin | T8107035 |
| 4 | 13 | Cap Screw 1/2" X 1 1/4"(Ret. Gld. Bolts) | Steel Z.P. | T8100032 |
| 2 | 17 | Hose Cap Gasket | Red Rubber | T8107473 |
| 1 | 18 | Storz Pumper Cap "O" Ring | Buna - N | T8100227 |
| 1 | 19 | Pumper Cap | Cast Iron | Pumper Cap Page |
| 1 | 20 | Pumper Nozzle | Copper Alloy | Pumper Nozzle Page |
| 1 | 22 | Pumper Nozzle Pin | Brass | F8100942 |
| 8 | 24 | Intersection Bolts & Nuts | Steel | R8103201 |
| 4 | 25 | Safety Flange Segments | Cast Iron | M8101510 |
| 2 | 26 | Intersection Gasket | Red Rubber | T8100240 |
| 1 | 27 | Safety Coupling | Cast Iron | M8101511 |
| 2 | 28 | Safety Coupling Bolt & Nut (3/8"X3") | Steel Z.P. | R8103200 (Set of 2) |
| 1 | 29 | Lower Operating Stem (6' B) | Steel | Stem Page |
| 1 | 30 | Intermediate Section Epoxy Coated | Ductile Iron | I.S. Page |
| 1 | 31 | Drip Valve- Ass'y (#'S 31,39,40,48) | Copper Alloy (#31) | F8100947 |
| 1 | 32* | Drain Hole Lining | Brass | T8100438 |
| 1 | 34a | Main Valve Seat "O" Ring (Upper) | Buna - N | T8100219 |
| 1 | 34 | Main Valve Seat "O" Ring (Lower) | Buna - N | T8100218 |
| 1 | 35 | Main Valve Disc | Rubber Or Poly | R - T8100444 / P - T8100445 |
| 1 | 38 | Main Valve "O" Ring | Buna - N | T8100206 |
| 1 | 39 | Drip Valve Rubber | Rubber | T8100443 |
| 1 | 40 | Holding Clamp | Plastic | T8100442 |
| 1 | 42 | Main Valve Seat | Copper Alloy | F8100933 |
| 1 | 44* | 6" Hydrant Inlet Flg / Tyton / MJ | Cast Iron | Inlet Page |
| | 45&46 | Interior Wrench & Guide | | R8101516 |
| | 47 | Holding Nut (Confirm LH or RH) | | OL: F8101518 OR: F8101517 |
| 1 | 48 | Holding Clamp Screw | Brass | T8100133 |
| 1 | 49 | 1/4" Internal Drain Hole Plug | Brass | T8100922 |
| 2 | 49a | 3/8" External Drain Hole Plug | Brass | T8100480 |
| 1 | 50 | Intersection Extension @ Grade | Ductile Iron | Extension Page |
| 1 | 51 | Extension Stem @ Grade | Steel | Extension Page |
| 1 | 52 | Alignment Coupling | Cast Iron | A8105475 |
| 2 | 53 | Extension Stem Bolt & Nut | Steel Z.P. | R8103200 |
| 1 | 55 | Pipe Flange (Bottom) | Cast Iron | M8104150 |

## M67 / M93 / Monitor & Heritage Brigadier Hydrant Parts List Cont'd

| | | | | |
|---|---|---|---|---|
| 1 | 56 | Retaining Ring (Square) | Steel Z.P. | M8200441 |
| 1 | 57 | Monitor Bolts & Nuts (5/8"X2 3/4") | 18-8 Stainless Steel | T8100071/T8100016 |
| 1 | 58 | Monitor Elbow- 3" 90º C110 D.I. Flg | Cast Iron | M8100479 |
| 1 | 59 | Monitor Elbow-Gasket | Rubber | T8100243 |
| 1 | 61 | Pumper Cap Gasket - Small | Rubber | T8100243 |
| 1 | | Pumper Cap Gasket - Large | Rubber | T8100244 |
| 2 | 62a | Hose Nozzle "O" Ring | Buna - N | T8100214 |
| 1 | 62b | Pumper Nozzle "O" Ring | Buna - N | T8100217 |
| 1 | 63 | Operating Nut Retaining Gland | Cast Iron | M8104776 |
| 1 | 64 | Hydralube Operating Nut | Copper Alloy | Op Nut Page |
| 1 | 65 | Retaining Gland "O" Rings | Buna - N | T8100211 |
| 1 | 66 | Lower Valve Plate | Cast Iron | M8104777 |
| 1 | 67 | Main Valve Lock washer | 18-8 Stainless Steel | T8104783 |
| 1 | 68 | Lower Valve Plate "O" Ring | Buna - N | T8103905 |
| 2 | 69 | Hose Nozzle Set Screw | 18-8 Stainless Steel | T8200607 |
| 1 | 70 | Upper Operating Stem | 416 Mx SS | A8104781 |
| 1 | 71 | 100mm Storz Pumper Nozzle - Brass | Brass | F8100895 |
| 2 | 72 | 63mm (2-1/2") Storz Hose Nozzle | Brass | Hose Nozzle Page |
| 2 | 73 | Storz Hose Cap "O" Ring | Buna - N | T8104513 |
| 2 | 74 | 63mm (2-1/2") Storz Hose Cap | Cast Iron | Hose Nozzle Page |
| 1 | 75 | (4") 100 Mm Storz Pumper Nozzle (SS) | 18-8 Stainless Steel | M8200299 |
| 1 | 76 | (4") Storz Pumper Cap | Cast Iron | Pumper Cap Page |
| 4 | 77 | Body Cap Allen Screws or Hex Bolts | 18-8 Stainless Steel | T8100149 |
| 1 | 78 | Body Cap | Cast Iron | OL: M8105175 / OR: M8105176 |
| 1 | 79 | Body Cap Gasket | Red Rubber | T8200563 |
| 1 | 80 | Upper Body | Cast Iron | M8105169 |
| 1 | 81* | Seat Ring | Copper Alloy | F8105153 |
| 1 | 82 | Pipe Flange (Top) | Cast Iron | M8104149 |
| 1 | 83 | Safety Coupling Clevis Bolt & Pin | Steel Z.P. | T8401117 / T8400262 |
| 1 | 84 | 14" Dia. Handwheel W/ Spinner Ass'y | Cast Iron | R8105433 - 7/8-5 Sided / R8105432 1 1/2"-3 Tri. / R8105431 - 1 1/4"SQ |
| 1 | 85 | 1/2"X3" Bolt W/Spinner | 18-8 Stainless Steel | T8200594 / M8101222 |
| | 87 | On-Line Spider | Cast Iron | M8300287 |
| | 88 | Hex HD Bolt 3/8"X1-1/4" 18-8 SS | 18-8 Stainless Steel | T8105747 |
| | 90 | 125mm Storz Pumper Noz Ext "O" Ring | Buna - N | T8105793 |
| 1 | 91* | 6" Online Chamber - ANSI B16.1 Flg. | Cast Iron | A8105313 |
| 1 | 91* | 8" Online Chamber - ANSI B16.1 Flg. | Cast Iron | A8300286 |
| | 93 | 5/16"X1" Hex Bolt | Steel Z.P. | T8100027 |
| 1 | Ass'y (95,95,96 & 26(x2) * | 1/4" Thick - Northern Insulation Kit | Phenolic / Red Rubber | T8108101 |
| | 97 | 11/32"X1 1/2" Flat Washer | Steel Z.P. | T8100721 |
| | 101 | Zinc Anode | | T8200473 |
| 1 | 108 | (5") 125mm Storz Pumper Cap "O" Ring | Buna - N | T8105792 |
| 1 | 109 | (5") 125mm Storz Pumper Cap | Cast Iron | Pumper Cap Page |
| 1 | 110 | (5") 125mm Storz Pumper Nozzle | Copper Alloy | F8105734 |

## M67B Brigadier Hydrant Drawing

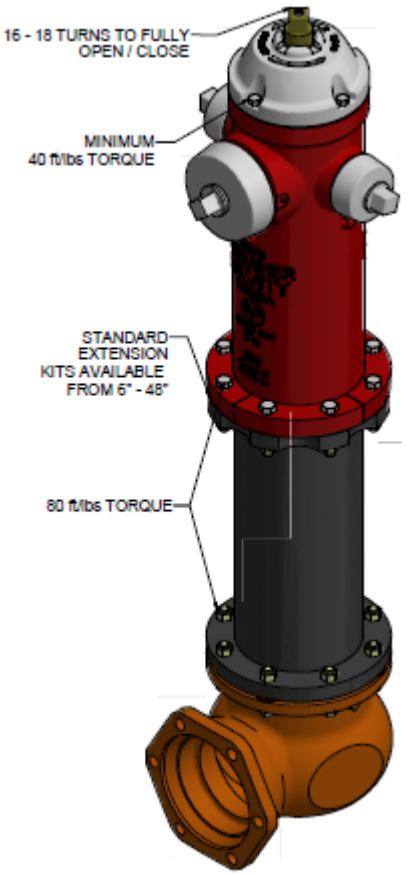


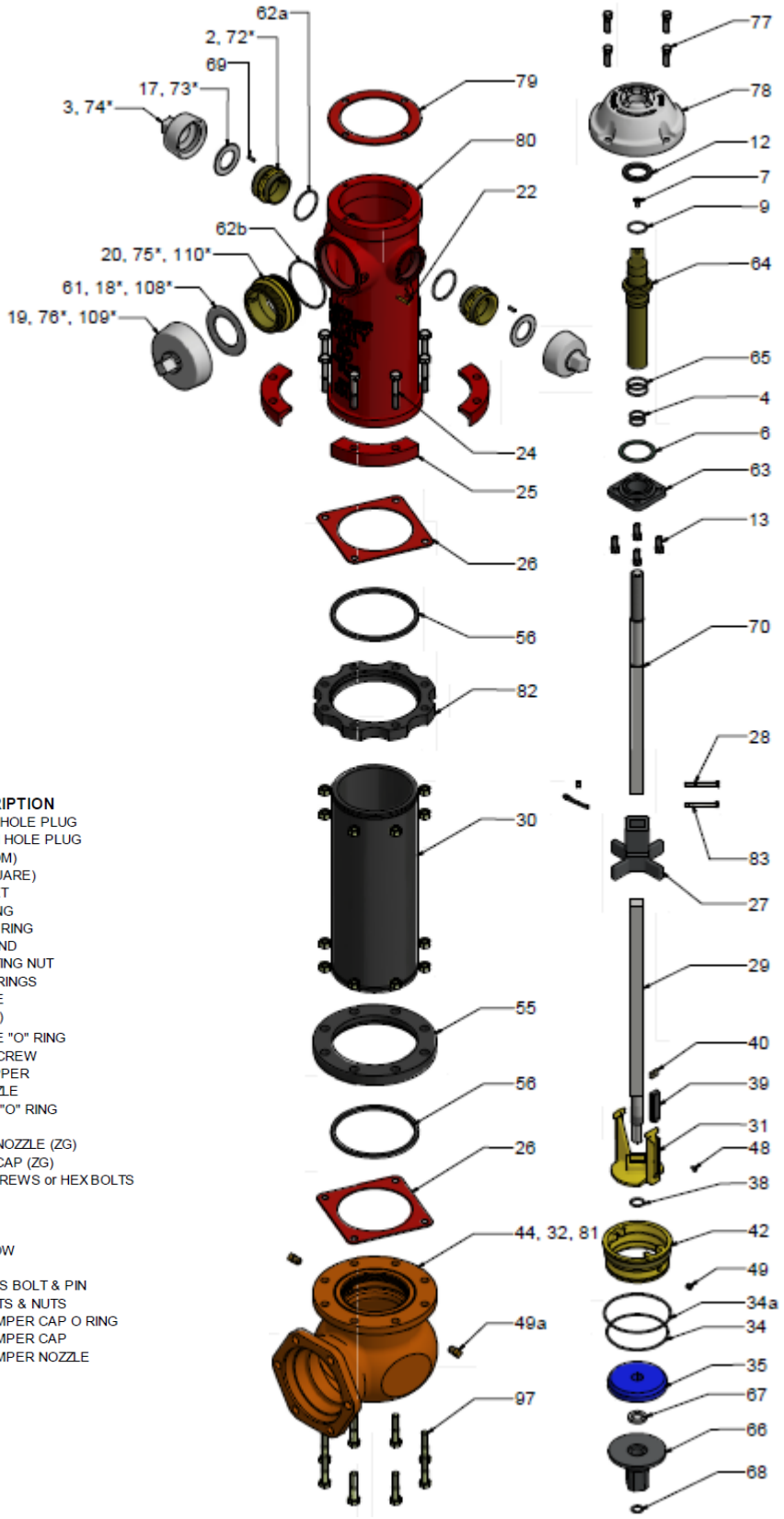


| REF # | DESCRIPTION | REF # | DESCRIPTION |
|---|---|---|---|
| 2 | HOSE NOZZLE | 49* | 1/4" INTERNAL DRAIN HOLE PLUG |
| 3 | HOSE NOZZLE CAP | 49a* | 3/8" EXTERNAL DRAIN HOLE PLUG |
| 4 | HOUSING STEM "O" RINGS | 55 | PIPE FLANGE (BOTTOM) |
| 6 | HOUSING JOINT GASKET | 56 | RETAINING RING (SQUARE) |
| 7 | OIL HOLE SCREW | 61 | PUMPER CAP GASKET |
| 9 | OPERATING NUT "O" RING | 62a | HOSE NOZZLE "O" RING |
| 12 | OPERATING NUT BEARING | 62b | PUMPER NOZZLE "O" RING |
| 13 | RET. GLAND HEX BOLT (1/2" x 1 1/4") | 63 | OPERATING NUT GLAND |
| 17 | HOSE CAP GASKET | 64 | HYDRALUBE OPERATING NUT |
| 18 | STORZ 100 PUMPER CAP "O" RING | 65 | OPERATING NUT "O" RINGS |
| 19 | PUMPER NOZZLE CAP | 66 | LOWER VALVE PLATE |
| 20 | PUMPER NOZZLE | 67 | LOCKWASHER (1 1/8") |
| 21* | PUMPER CAP CHAIN & "S" HOOK | 68 | LOWER VALVE PLATE "O" RING |
| 22 | PUMPER NOZZLE PIN | 69 | HOSE NOZZLE SET SCREW |
| 24 | INTERSECTION BOLS & NUTS | 70 | OPERATING STEM UPPER |
| 25 | SAFETY FLANGE (SEGMENTS) | 72* | STORZ 65 HOSE NOZZLE |
| 26 | INTERSECTION GASKET | 73* | STORZ 65 HOSE CAP "O" RING |
| 27 | SAFETY COUPLING | 74* | STORZ 65 HOSE CAP |
| 28 | SAFETY COUPLING BOLT & NUT | 75* | STORZ 100 PUMPER NOZZLE (ZG) |
| 29 | OPERATING STEM LOWER | 76* | STORZ 100 PUMPER CAP (ZG) |
| 30 | INTERMEDIATE SECTION | 77 | BODY CAP ALLEN SCREWS or HEX BOLTS |
| 31 | DRIP VALVE | 78 | BODY CAP |
| 32 | DRAIN HOLE LINING C/W ELBOW | 79 | BODY CAP GASKET |
| 34 | SEAT "O" RING BOTTOM | 80 | BODY |
| 34a | SEAT "O" RING TOP | 81 | SEAT RING C/W ELBOW |
| 35 | MAIN VALVE DISC | 82 | PIPE FLANGE TOP |
| 38 | MAIN VALVE "O" RING | 83 | SAFETY CPLG. CLEVIS BOLT & PIN |
| 39 | DRIP VALVE FACING | 97 | PIPE TO ELBOW BOLTS & NUTS |
| 40 | HOLDING CLAMP | 108* | STORZ 125mm ZH PUMPER CAP O RING |
| 42 | MAIN VALVE SEAT | 109* | STORZ 125mm ZH PUMPER CAP |
| 44 | ELBOW (STATE INLET REQUIRED) | 110* | STORZ 125mm ZH PUMPER NOZZLE |
| 48 | HOLDING CLAMP SCREW | | |

**BRIGADIER**

250 PSI **FM** APPROVED

## McAvity M67 Parts List

| QTY | REF | DESCRIPTION | PRODUCT CODE |
|---|---|---|---|
| - | 1 | Operating Housing (Now Retaining Gland W/ Op. Nut 63 & 64) | |
| 2 | 2 | Hose Nozzle | Hose Nozzle Page |
| 2 | 2A | Nozzle "O" Ring | T8100214 |
| 2 | 3 | Hose Cap | Hose Cap Page |
| 2 | 4 | Housing Stem "O" Ring | T8100207 |
| 1 | 6 | Housing Joint Gasket | T8107782 |
| 1 | 7 | Oil Hole Screw | T8100131 |
| - | 8 | Discontinued See Part # 64 Op Nut-See Below | F8100872 |
| - | 9 | Operating Nut "O" Ring | T8100210 |
| 2 | 10 | Body Cover Screws | T8100152 |
| 1 | 11 | Body Cover | OL: M8101508 OR: M8101509 |
| 1 Ass'y | 12 | Needle Bearing | R8103346 |
| 4 | 13 | Housing Cap Screws | T8100032 |
| 1 | 14 | Body Cap | **M8108628** |
| 1 | 15 | Body Cap "O" Ring | T8100221 |
| 1 | 16 | Upper Barrel 2H1P | **Threaded Body Discontinued** |
| 2 | 17 | Hose Cap Gasket | T8107473 |
| 1 | 18 | Pumper Cap Gasket | T8100243 / T810244 |
| 1 | 19 | Pumper Cap | Pumper Cap Page |
| 1 | 20 | Pumper Nozzle | Pumper Nozzle Page |
| 1 | 20A | Pumper Nozzle "O" Ring | T8100217 |
| 1 | 22 | Nozzle Pin (Same as Brigadier) | F8100942 |
| - | 23 | Discontinued See Part #70 | O/L A8104781 |
| 8 | 24 | Intersection Bolts & Nut | R8103201 |
| 4 | 25 | Safety Flange Segments | M8101510 |
| 2 | 26 | Intersection Gasket | T8100240 |
| 1 | 27 | Safety Coupling | M8101511 |
| 1 | 28 | Coupling Bolts & Nut | Set of 2 R8103200 |
| 1 | 29 | Lower Stem 6'0" Bury | M8101450 |
| 1 | 30 | Lower Barrel 6'0" Bury | A8104110 |
| 1 | 31 | Drip Valve Assembled | F8100947 |
| 1 | 32 | Drain Hole Liner | 1-13/32" T8100438<br>1-19/32" T8105965 |
| 1 | 33 | Seat Casing "O" Ring | T8100220 |
| 1 | 34 | Lower Seat "O" Ring | T8100218 |
| 1 | 34A | Upper Seat "O" Ring | T8100219 |
| 1 | 35 | Main Valve Rubber - Buna | T8100444 |
| 1 | 36 | Main Valve Washer | M8100932 |
| 1 | 37 | Cotter Pin | T8100139 |
| 1 | 38 | Main Valve "O" Ring | T8100206 |
| 1 | 39 | Drip Valve Facing | T8100443 |
| 1 | 40 | Drip Valve Facing Clamp | T8100442 |
| 1 | 41 | Seat Casing *****Obsolete***** | Not Offered |
| 1 | 42 | Main Valve Seat | F8100933 |
| 1 | 43 | Main Valve Locknut | F8100934 |
| 1 | 44 | Inlet Boot (State Joint Type) | Inlet Page |
| 1 | 48 | Holding Clamp Screw | T8100133 |
| 1 | 63 | Retaining Gland | M8104776 |
| 1 | 64 | Hydralube Operating Nut | F8104760 |
| 1 | 70 | Upper Operating Stem | A8104781 |

## M67 McAvity Hydrant Drawing

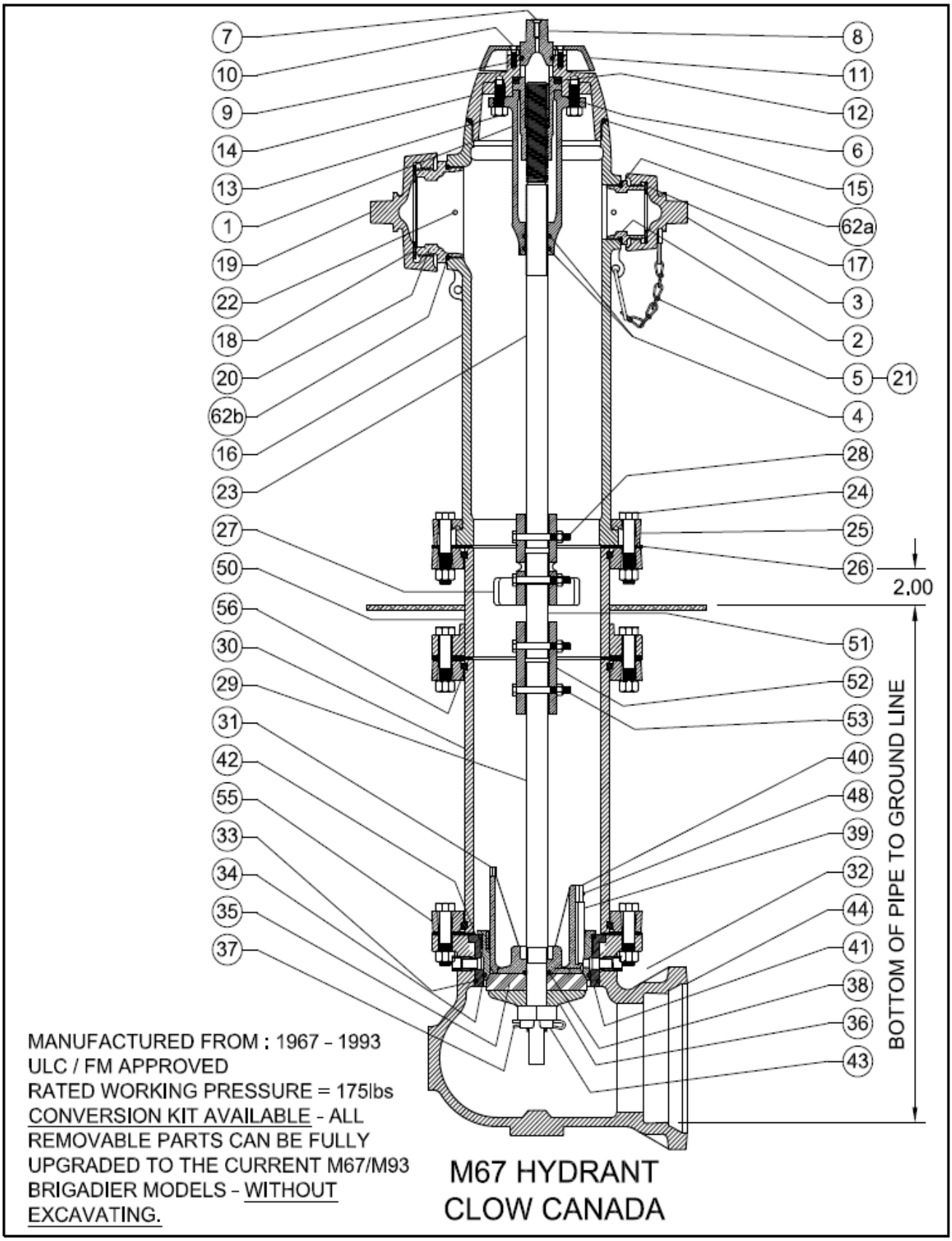

## D67M Premier Hydrant Parts List

| QTY | REF | DESCRIPTION | PROUDUCT CODE |
|---|---|---|---|
| 1 | 2 | Bonnet Op Nut "O" Ring | T8100224 |
| 1 | 3 | Bonnet | OL: M8200233 |
| 1 | 5 | Delrin Bearing | T8107035 |
| 1 | 7 | Bonnet Gasket | T8200563 |
| 2 | 9 | Op Nut "O" Ring | T8100207 |
| 1 | 10 | Breaking Coupling | M8200240 |
| 1 | 11 | Upper Barrel 2H1P | M8202741 |
| 2 | 12 | Coupling Bolt & Nut | T8100085 + T8104424 = R8108296 |
| 1 | 13 | Body Gasket | T8200581 |
| 12 | 14 | Int. Section Bolts & Nuts | T8100016 + T8100072 = R8204328 |
| 1 | 16 | Breaking Flange | M8200476 |
| 1 | 17 | Stem Guide | M8200281 |
| 1 | 18 | Stem Guide Set Screw | T8200603 |
| 1 | 19 | Lower Barrel 6' Bury | Variable Parts |
| 1 | 20 | Drain Valve Ass'y Complete (p/ns 20,22,23) | A8202257 |
| 3 | 21 | Drain Valve Screw | T8200579 |
| 6 | 22 | Drain Valve Rivet (Avail. In assembly only) | T8200604 |
| 3 | 23 | Drain Valve Rubber | T8200572 |
| 1 | 24 | Gasket | T8200570 |
| 1 | 25 | Drain Valve "O" Ring Upper | T8200588 |
| 1 | 26 | Valve Seat | F8200474 |
| 1 | 27 | Drain Valve "O" Ring Lower | T8200589 |
| 1 | 29 | Valve Carrier Upper | Old: M8200282 / New: M8200283 |
| 1 | 30 | Main Valve Rubber - Buna | T8200478 |
| 1 | 31 | Valve Retainer Lower | M8200283 |
| 1 | 32 | Base | INLET PAGE |
| 4 | 34 | Bonnet Allen Screw | T8200594 |
| 2 | 36 | Hose Cap Gasket | T8107473 |
| 1 | 36-1 | Pumper Cap Gasket | LG-8100244 SM-T8100243 |
| 1 | 37-1 | Pumper Nozzle Storz (not shown) | M8200299 |
| 1 | 38-1 | Pumper Cap Storz (not shown) | M8200309 |
| 1 | 40 | Chains 2 Hose | R8104344 |
| 1 | 41 | Chains 2 Hose 1 Pumper | R8104345 |
| 2 | 43 | Retaining Ring | M8200441 |
| 1 | 44 | Lower Stem 6' Bury | M8200357 |
| 2 | 45 | Drain Hole Liner | T8100438 |

## D67M Premier Hydrant Parts List – Cont'd

| | | | |
|---|---|---|---|
| **3** | 46 | Drain Valve Spring | T8200583 |
| **1** | 47 | Floating Flange | M8200302 |
| **1** | 48 | Threaded Flange (Optional) | M8200399 |
| **1** | 49 | Spiral Pin Head | T8104353 |
| | 50 & 51 | Interior Wrench & Guide | R8101516 |
| **1** | 55 | Seat Ring (Optional / not shown) | F8105154 |
| **1** | 57 | Extension Coupling (Optional) | A8203449 |
| **1** | 59 | Operating Nut | Op Nut Page |
| **1** | 60 | Op Nut Retaining Gland | M8202730 |
| **1** | 61 | Upper Operating Stem | A8202728 |
| **2** | 62 | Hose Nozzle | Hose Nozzle Page |
| **1** | 62-1 | Pumper Nozzle | Pumper Nozzle Page |
| **2** | 63 | Hose Cap | Hose Cap Page |
| **1** | 63-1 | Pumper Cap | Pumper Cap Page |
| **1** | 64 | Hose Nozzle "O" Ring | T8100214 |
| **1** | 64-1 | Pumper Nozzle "O" Ring | T8100217 |
| **2** | 65 | Gland Op Nut "O" Ring | T8100211 |
| **2** | 67 | Hose Nozzle Set Screw | T8200607 |
| **1** | 67 -1 | Nozzle Pin | F8100942 |
| **1** | 68 | Pumper Cap "O" Ring Storz (Not Shown) | T8100227 |
| **2** | 69 | Hose Nozzle Storz (Optional / Not Shown) | Hose Nozzle Page |
| **2** | 70 | Hose Cap Storz (Optional / Not Shown) | Hose Cap Page |
| **1** | 71 | Hose Cap "O" Ring | T8104513 |
| **1** | 73 | Safety Coupling Clevis Bolt & Pin | T8401117 + T8400262 = R8108127 |
| **1** | 74 | Oil Hole Screw | T8100131 |
| | 75 | External Drain Plug 3/8" | T8100480 |
| | 76 | Internal Drain Plug 1/4" | T8203629 |
| **1** | 78 | 14" Dia. Handwheel W/ Spinner Ass'y | R8105433 - 7/8-5 sided |
| **1** | 79 | 1/2"X3" Bolt W/Spinner | T8200594 + M8101222 = R8108118 |
| **1** | 80 | 5/16"X1" Hex Bolt | T8100027 |
| **1** | 81 | 11/32"X1 1/2" Flat Washer | T8100721 |

## D67M – P Premier Hydrant Drawing

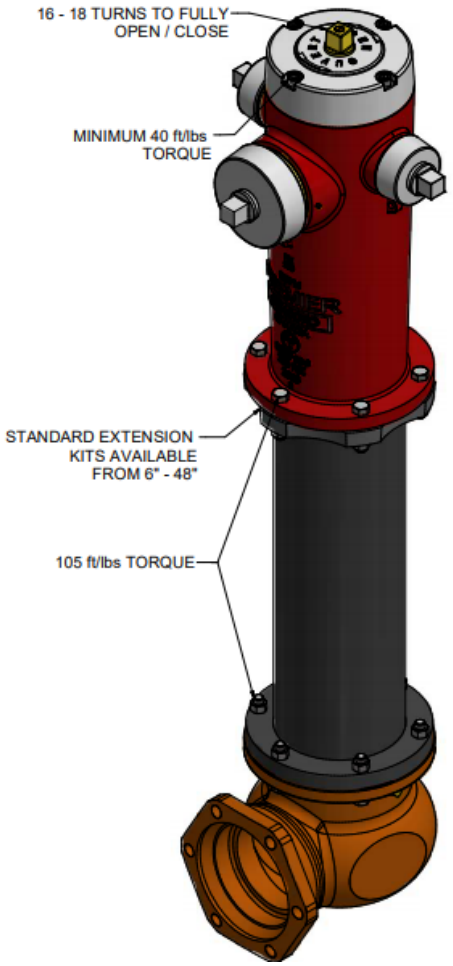


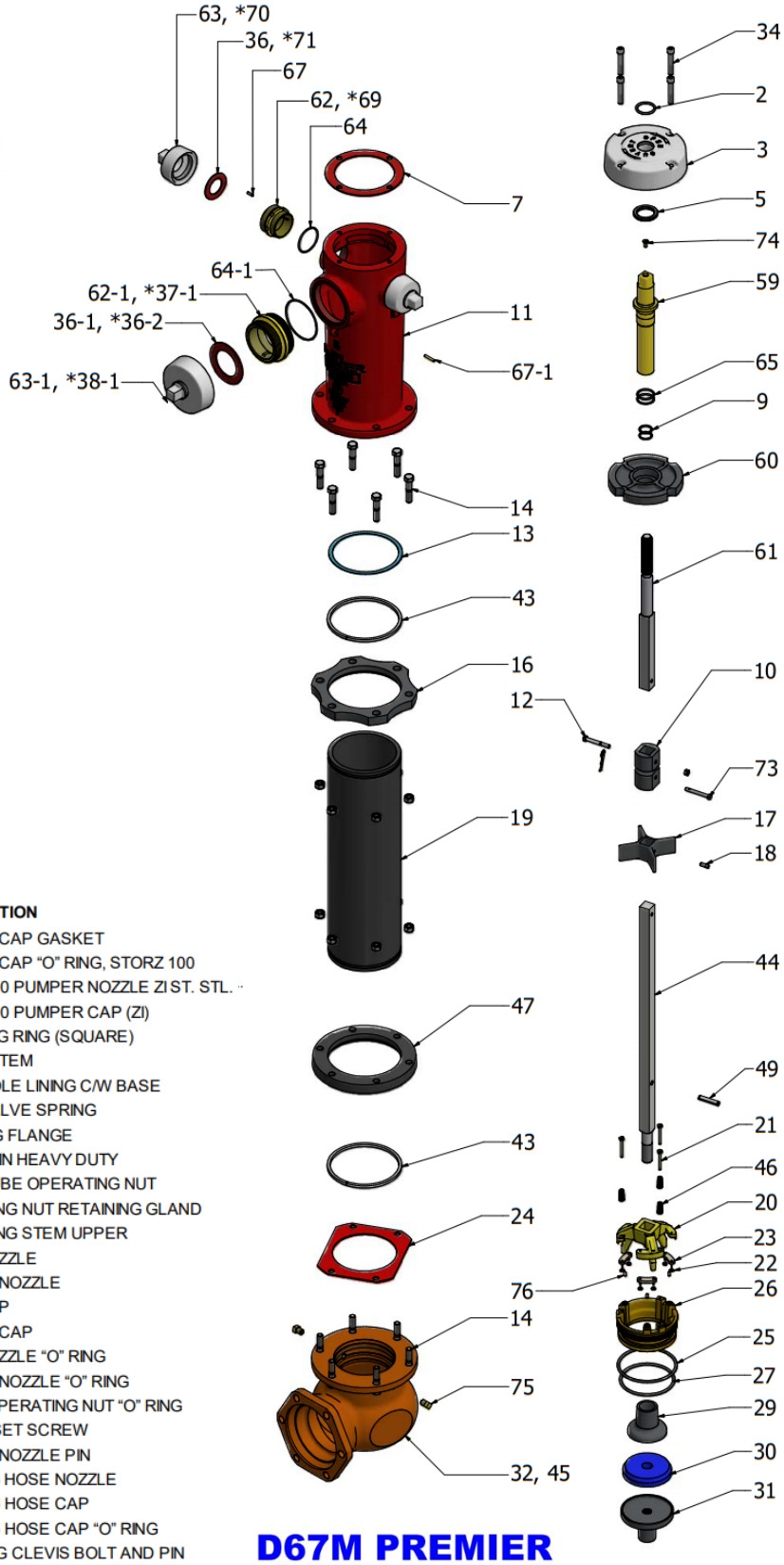


| | DESCRIPTION |
|---|---|
| 2 | BONNET OPERATING NUT "O" RING |
| 3 | BONNET |
| 5 | OPERATING NUT BEARING |
| 7 | BONNET GASKET |
| 9 | HOUSING OPERATING NUT "O" RING |
| 10 | BREAK COUPLING |
| 11 | HYDRANT BODY |
| 12 | HEX HEAD BOLT & NUT (COUPLING) |
| 13 | HYDRANT BODY RING GASKET |
| 14 | HEX HEAD BOLT & NUT (INTERSECTION)) |
| 16 | BREAKING FLANGE |
| 17 | STEM GUIDE |
| 18 | STEM GUIDE SET SCREW |
| 19 | INTERMEDIATE SECTION |
| 20 | DRAIN VALVE TRIPOD |
| 21 | DRAIN VALVE SCREW |
| 22 | DRAIN VALVE RIVET |
| 23 | DRAIN VALVE RUBBER |
| 24 | INTERMEDIATE GASKET |
| 25 | M.V. SEAT UPPER "O" RING |
| 26 | MAIN VALVE SEAT |
| 27 | M.V. SEAT LOWER "O" RING |
| 29 | VALVE CARRIER |
| 30 | MAIN VALVE RUBBER or BLUE POLY |
| 31 | LOWER VALVE PLATE |
| 32 | BASE (STATE INLET REQUIRED) |
| 34 | BONNET ALLEN SCREW |
| 36 | HOSE CAP GASKET |

| | DESCRIPTION |
|---|---|
| 36-1 | PUMPER CAP GASKET |
| *36-2 | PUMPER CAP "O" RING, STORZ 100 |
| *37-1 | STORZ 100 PUMPER NOZZLE ZI ST. STL. |
| *38-1 | STORZ 100 PUMPER CAP (ZI) |
| 43 | RETAINING RING (SQUARE) |
| 44 | LOWER STEM |
| 45 | DRAIN HOLE LINING C/W BASE |
| 46 | DRAIN VALVE SPRING |
| 47 | FLOATING FLANGE |
| 49 | SPIROL PIN HEAVY DUTY |
| 59 | HYDRALUBE OPERATING NUT |
| 60 | OPERATING NUT RETAINING GLAND |
| 61 | OPERATING STEM UPPER |
| 62 | HOSE NOZZLE |
| 62-1 | PUMPER NOZZLE |
| 63 | HOSE CAP |
| 63-1 | PUMPER CAP |
| 64 | HOSE NOZZLE "O" RING |
| 64-1 | PUMPER NOZZLE "O" RING |
| 65 | GLAND OPERATING NUT "O" RING |
| 67 | NOZZLE SET SCREW |
| 67-1 | PUMPER NOZZLE PIN |
| *69 | STORZ 65 HOSE NOZZLE |
| *70 | STORZ 65 HOSE CAP |
| *71 | STORZ 65 HOSE CAP "O" RING |
| 73 | COUPLING CLEVIS BOLT AND PIN |
| 74 | OIL HOLE SCREW |
| *75 | EXTERNAL DRAIN PLUG 3/8" |
| *76 | INTERNAL DRAIN PLUG 1/4" |

**D67M PREMIER**

250 PSI **FM** APPROVED

## Concord D67M Parts List

| REF | DESCRIPTION | PROUDUCT CODE |
|---|---|---|
| 1 | Operating Nut | F8200229 |
| 2 | "O" Ring | T8100224 |
| 3 | Bonnet | O/R M8200235 O/L M8200233 |
| 4 | Cone Allen Screw | T8200596 |
| 5/6 | Delrin Washer | **T8107035** |
| 7 | Bonnet Gasket | T8200563 |
| 8 | Discontinued See Part #60&61 | See Premier List |
| 9 | "O" Ring | T8100207 |
| 10 | Coupling | M8200240 |
| 11 | Upper Barrel 2H1P | M8202741 |
| 12 | Hex Head Bolt & Nut | Set Of 2 R8103200 |
| 13 | Body Gasket | T8200581 |
| 14 | Hex Head Bolt | T8100043 |
| 15 | Hex Nut | T8100003 |
| 16 | Breaking Flange | M8200476 |
| 17 | Stem Guide | M8200281 |
| 18 | Stem Guide Set Screw | T8200603 |
| 19 | Lower Barrel 6'0" Bury | M8200411 |
| 20 | Drain Tripod Complete | A8202257 |
| 21 | Drain Valve Screw | T8200579 |
| 22 | Drain Valve Rivet | T8200604 |
| 23 | Drain Valve Rubber | T8200572 |
| 24 | Intersection Gasket (Red) | T8200570 |
| 25 | "O" Ring | T8200588 |
| 26 | Valve Seat | F8200474 |
| 27 | "O" Ring | T8200589 |
| 28 | "O"' Ring | T8103906 |
| 29 | Valve Ball Top | M8200282 |
| 30 | Main Valve Rubber - Buna | T8200477 |
| 31 | Valve Ball Bottom | M8200283 |
| 32 | Base (State Inlet Type) | See Inlet Page |
| 34 | Bonnet Allen Screw | T8200594 |
| 35 | Nozzle Allen Screw | T8200607 |
| 36 | Hose Cap Gasket | T8107473 |
| 36/1 | Pumper Cap Gasket | T8100243 T8100244 |
| 37 | Hose Nozzle | Consult Sales for Bayonets style |
| 37/1 | Pumper Nozzle | |
| 37/1 | Storz Pumper Nozzle | |
| 38 | Hose Cap (Same as M67) | |
| 38/1 | Pumper Cap | |
| 38/1 | Storz Pumper Cap | |
| 39 | Hose Nozzle "O" Ring | T8100214 |
| 39/1 | Pumper Nozzle "O" Ring | 4" T8200614 4.5" T8100216 |
| 40/41 | Cables & Clips | Chains Are Now Used |
| 42 | Upper Stem | O/R A8200337 O/L A8200336 |
| 43 | Retainer Ring | M8200441 |
| 44 | Lower Stem 6'0" Bury | M8200357 |
| 45 | Drain Out Sleeve | M8200584 |
| 46 | Drain Valve Spring | T8200583 |
| 47 | Floating Flange | M8200302 |
| | Brass Lead Plug | T8203629 |
| 49 | Spiral Pin HD | T8104353 |

## Concord D67M Drawing

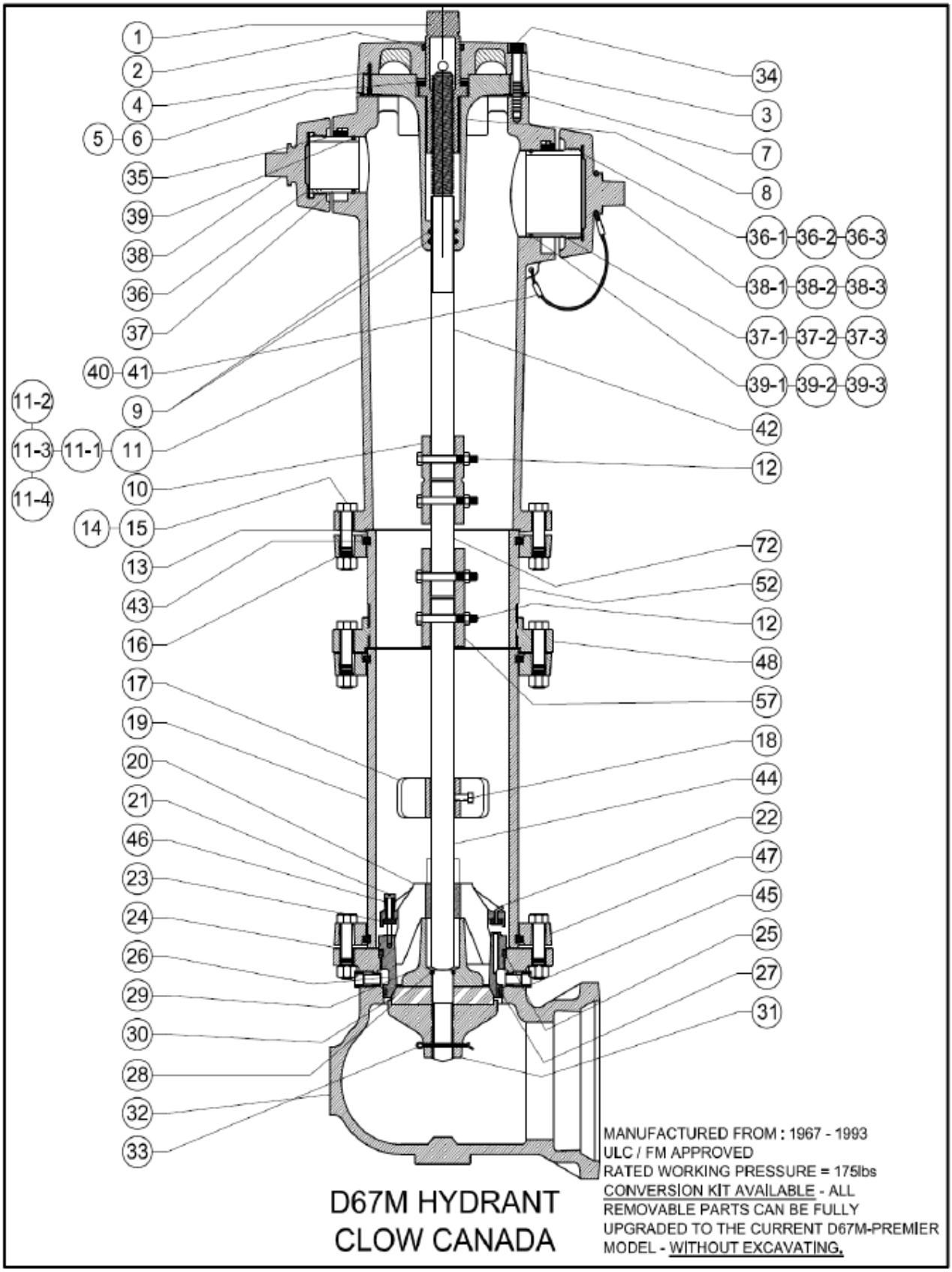

## Concord Daigle D67 Parts List

| REF | DESCRIPTION | PROUDUCT CODE |
|---|---|---|
| 1 | Discontinued | See # 59 |
| 3 | Bonnet | OL: M8200233 OR: M8200235 |
| 5/1 | Bonnet Gasket | T8200563 |
| 5/2 | Cap Gasket | - |
| 5/3 | Flange Gasket | T8200570 |
| 5/4 | Drain Valve Rubber | T8200572 |
| 5/5 | Intersection Gasket - 8 Holes | T8100240 |
| 7 | Cone-Discontinued (See Part No 60) | Not Offered |
| 9 | Upper Stem | OR: A8200335 OL: A8200334 |
| 10 | Break Coupling | M8200239 |
| 11 | Lower Stem 6'0" Bury | M8200345 |
| 12 | Hose Nozzle | Consult Sales for Bayonet Style |
| 12A | Pumper Nozzle | Consult Sales for Bayonet Style |
| 13 | Hose Cap | Consult Sales for Bayonet Style |
| 13A | Pumper Cap | Consult Sales for Bayonet Style |
| 15 | Hydrant Body-Discontinued | Not Offered |
| 16 | Cable with Clips / Now Use Chains | R814345 – 2H1P |
| 17 | Lower Barrel 6'0" Bury | Not Offered |
| 18 | Drain Valve Tripod | A8200276 |
| 19 | Drain Valve Screw | T8200579 |
| 20 | Main Valve Seat | A8200556 |
| 25 | Stem Guide | M8200442 |
| 27 | Valve Spacer | M8200282 |
| 28 | Main Valve Rubber - Buna | T8200477 |
| | Main Valve Rubber - Poly | T8200478 |
| 29 | Valve Plate-Discontinued (See Part No 61) | Not Offered |
| 30 | Base (State Inlet Type) | Not Offered |
| 31 | Breaking Flange 6x8 | M8200480 |
| | Breaking Flange 6x6 | M8200479 |
| 35 | Drain Valve Spring | T8200583 |
| 38 | Drain Sleeve | T8200584 |
| 39 | "O" Ring#216 | T8103906 |
| 40 | "O" Ring#328 | T8100224 |
| 41 | "O" Ring# 218 | T8100207 |
| 42 | "O" Ring#438 | T8200588 |
| 43 | "O" Ring#435 | T8200589 |
| 44 | Roller Bearing or Delrin Bearing | R8103346 |
| 46 | Coupling Bolts & Nuts | T8200593/T8100085 |
| 48 | Bonnet Allen Screw | T8200594 |
| 49 | Cone Allen Screw | T8200596 |
| 50 | Hex Bolt 2" | T8100039 |
| 51 | Hex Bolt 3" | T8100043 |
| 53 | Stem Guide Screw | T8200603 |
| 54 | Drain Valve Rivet | T8200604 |
| 57 | Cotter Pin Discontinued | T8100138 |
| 58 | Castle Nut - Discontinued | T8200606 |
| 59 | Hydralube Operating Nut | **Consult Sales for hydralube conversion kit** |
| 60 | Operating Nut Retaining Gland | |

## Concord Daigle D67 Drawing

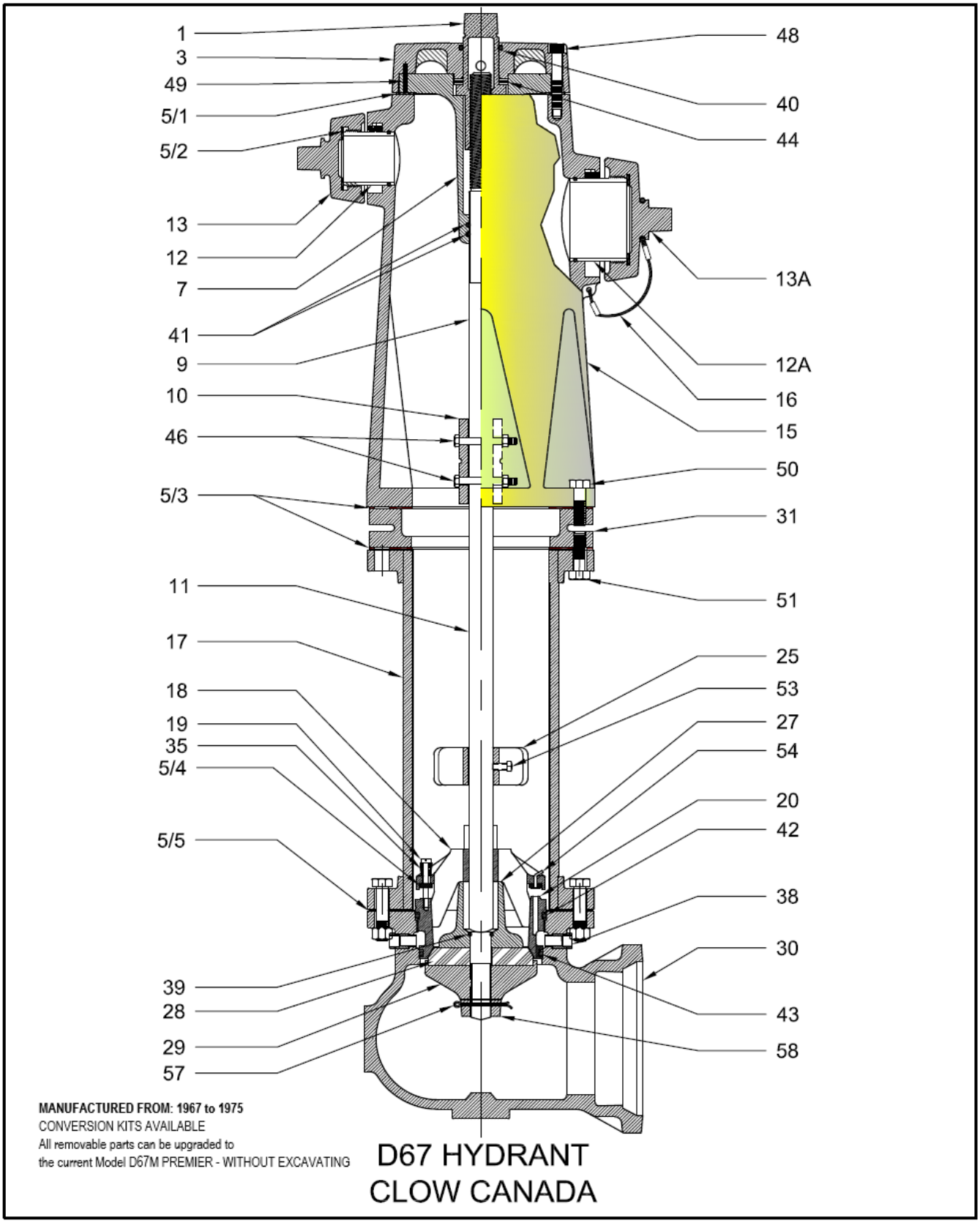

## McAvity 9651 #1 & #2 Parts List

| REF | DESCRIPTION | | PROUDUCT CODE #1 | PROUDUCT CODE #2 |
|---|---|---|---|---|
| | | | 4-1/4" VALVE OPENING | 5-1/4" VALVE OPENING |
| 1 | Weatherproof Cap | | M8300447 | |
| 2 | Operating Nut | | 1 1/4"Sq F8300101 | |
| 3A | Packing Nut C/W "O" Rings | | R8105179 | R8105179 |
| 3B | Internal "O" Ring | | T8100211 | T8100211 |
| 3C | External "O" Ring | | T8301210 | T8301210 |
| 4 | Operating Nut Thrust Flange | | M8300105 | M8300105 |
| 5 | Thrust Flange Bolts & Nuts 4 Req'd | | T8100032 / R8301316 | T8100032 / R8301316 |
| 6 | Body Cap (#1 M8300887) | | Oct M8300109 | OI:M8300862 |
| 7 | Body Cap Gasket (Round #1 T8300129) | | Oct T8300111 | Round T8300208 |
| 8 | Cap Bolts & Nuts Set | | R8300113 | R8300113 |
| 9 | Hose Nozzle | | See Chart | See Chart |
| 10 | Hose Cap | | See Chart | See Chart |
| 10A | Hose Cap Gasket | | T8107473 | |
| 11 | Stem Extension | | OL: F8300119 OR F8300444 | OL: F8300119 OR F8300444 |
| 12 | Stem Extension Pins Set | | F8300121 | |
| 13 | Body 2H1P | | Oct M8305081 | - |
| 14 | Body Bolts & Nuts | | T81000003 / T8100043 | T81000003 / T8100043 |
| 15 | Body Gasket | | T8300129 | T8300208 |
| 16 | Lower Barrel 6'0" Bury | | | |
| 17 | Main Valve Stem 6'0" Bury | | M8300319 | M8300319 |
| 18 | Drip Valve Assembly | | F8300137 | F8300138 |
| 19 | Main Valve Seat | | F8300140 | F8300141 |
| 19A | Main Valve Seat "O" Ring | | T8200616 | - |
| 21 | Main Valve Rubber -Buna | | M8301209 / M8301335 | T8100444 |
| 22 | Main Valve Washer | | M8300150 | M8100932 |
| 23 | Main Valve Lock Nut Set | | R8300152 | |
| 24 | Cotter Pin | | T8100139 | |
| 25 | Weatherproof Cap Screw | | T8300156 | |
| 25A | Oil Hole Screw | | T8100131 | |
| 26 | Pumper Cap | | See Chart | See Chart |
| 26A | Pumper Cap Gasket | | | |
| 27 | Pumper Nozzle | | See Chart | See Chart |
| 27A | Pumper Nozzle "O" Ring | | T8100214 | T8100214 |
| 28 | Interior Wrench | | | |
| 29 | Wrench Guide Plate | | M8300943 | |
| 30 | Packing | | | |
| 31 | Drip Valve Leathers & Screw | | M8300405 / T8300407 | M8300409 / T8300407 |
| 32 | Stem Extension Coupling (Not Shown) | | M8305174 | M8305174 |

## McAvity 9651 #1 & #2 Drawing

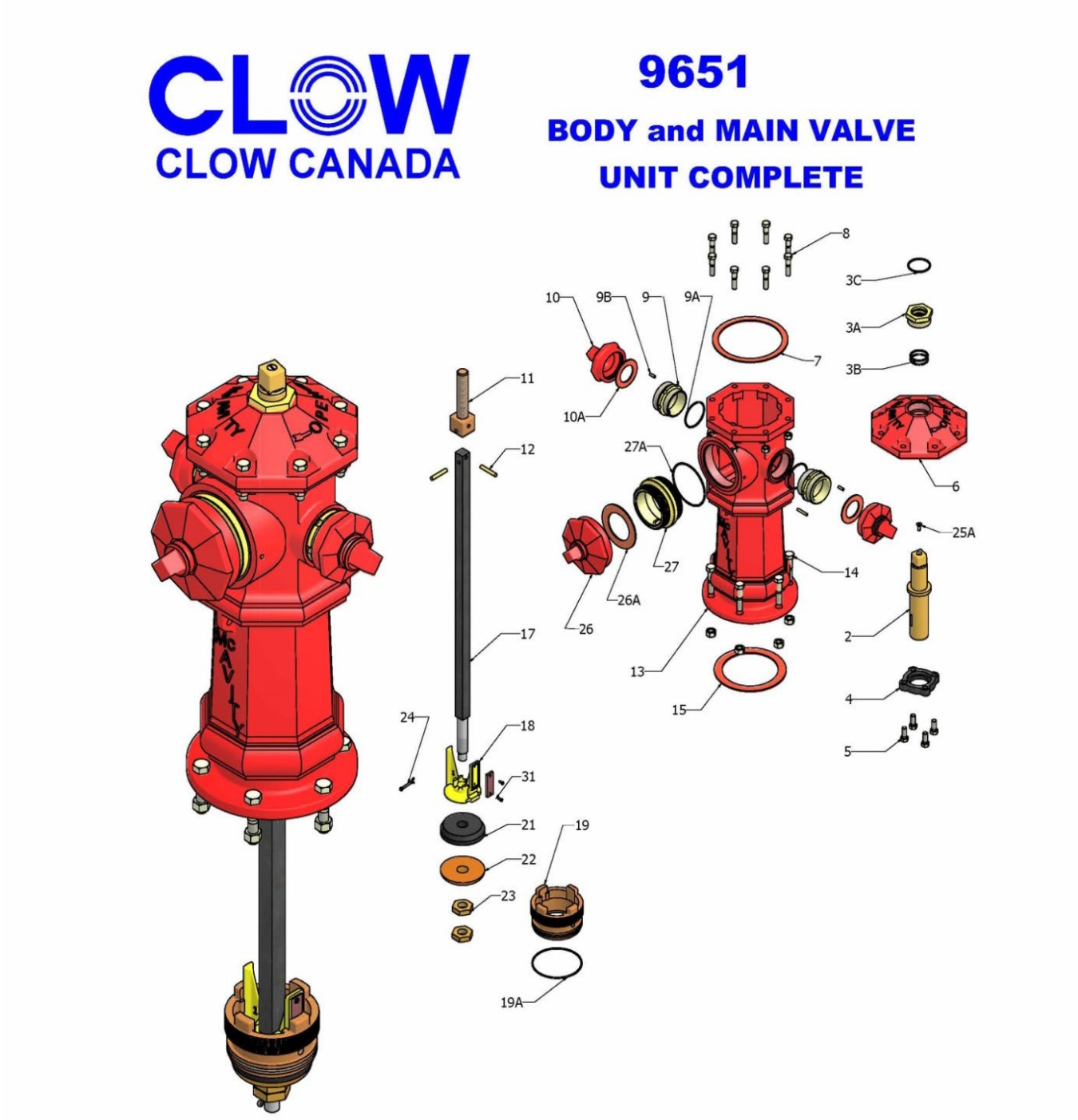


MANUFACTURED FROM: 1919 to 1960 - Round & Octagonal body styles
CONVERSION KITS AVAILABLE - Currently Octagonal body style ONLY!
All removable parts can be upgraded - without excavating
All available parts shown above
**WORLD 1** -4.25 " Main valve disc 6" ID lower pipe -No Conversion Available
**WORLD 2** -5.25 "Main valve disc 7" ID lower pipe -Octagonal body Conversion Available (special MVS req'd)
1-1/8" square stem
Can be converted to the M67 Brigadier

## McAvity 9658 Parts List

| REF | DESCRIPTION | PRODUCT CODE 4" | PRODUCT CODE 5" |
|---|---|---|---|
| 1 | Weather Cap Locknut | - | - |
| 2 | Weather Cap | 1-1/4SQ I8300192 | 7/8-5 I8300803 / 1''-5 I8300896 |
| 3&5 | Cover S/W Studs & Nuts | - | - |
| 4 | Gland | M8300106 | |
| 6&7 | Packing Plate Studs & Nuts Set | - | - |
| 8 | Packing Plate | M8300110 | M8300110 |
| 9 | Body Cover | M8300306 | M8300306 |
| 10 | Packing Plate Gasket | T8300116 | T8300116 |
| 11 | Operating Sleeve | F8300118 | F8300118 |
| 12 | Upper Barrel 2H1P | M8300123 | M8101573 |
| | Upper Barrel 2H (6-Hole) | M8300120 | M8301503 |
| 13 | Stem 6'0" Bury | | |
| 14 | Body Bolts & Nuts | T8100043 | T8100003 / T8100043 |
| 15 | Body Gasket | T8300129 | T8300208 |
| 17 | Stem Extension Pin Set | EA M8300136 | M8300136 |
| 18 | Stem Extension | O/L 4TPI F8301260 O/L 5TPI F8300139 | O/L F8300219 |
| 20 | Gate Piece | I8300145 | - |
| 21 | Gate Rubber | T8301272 | T8300149 |
| 23 | Gate Plate | F8300153 | NO LONGER AVAILABLE |
| 24 | Gate Plate Nut | F8300187 | |
| 25 | Wedge Nut New Style | 5TPI F8300155 | F8300220 |
| | Wedge Nut Old Style | 4TPI F8301177 | 4 TPI F8301197 |
| 26 | Drip Piece Locknut | F8300157 | F8300306 |
| 27 | Drip Piece | F8300159 | F8300917 |
| 28 | Drip Piece Pin | F8300185 | |
| 29 | Drip Washer | F8300161 | F8300161 |
| 31 | Drip Bolt | F8300165 | F8300165 |
| 32 | Drip Nut | F8300167 | F8300167 |
| 33 | Hose Nozzle | | |
| 34 | Hose Cap | 1-1/4" AA OCT M8301118 | |
| | ** Same as M67 Threaded | | |
| 34a | Hose Cap Gasket | | |
| 35 | Pumper Nozzle | | |
| 36 | Pumper Cap | | |
| 36a | Pumper Cap Gasket | | |
| 37 | Drip Valve Rubber | T8300177 | T8300177 |
| 39 | Gate Plate Rubber | M8300181 | M8300181 |
| 40 | Body Cap "O" Ring | | |
| 41 | Body Cap Bolts & Nuts | | |
| 42 | Operating Sleeve "O" Ring | T8100205 | T8100205 |
| 43 | Body Cap Gasket | T8300208 | T8300208 |
| 44 | Nozzle Pin | | |
| 45 | Hose Nozzle "O" Ring | | |
| 46 | Pumper Nozzle "O" Ring | | |
| 47 | Packing | | |
| **#11 Operating Sleeve "O" Ring Version F8300892** | | Contact Sales for Availability of Parts Not Listed | |

## McAvity 9658 Drawing

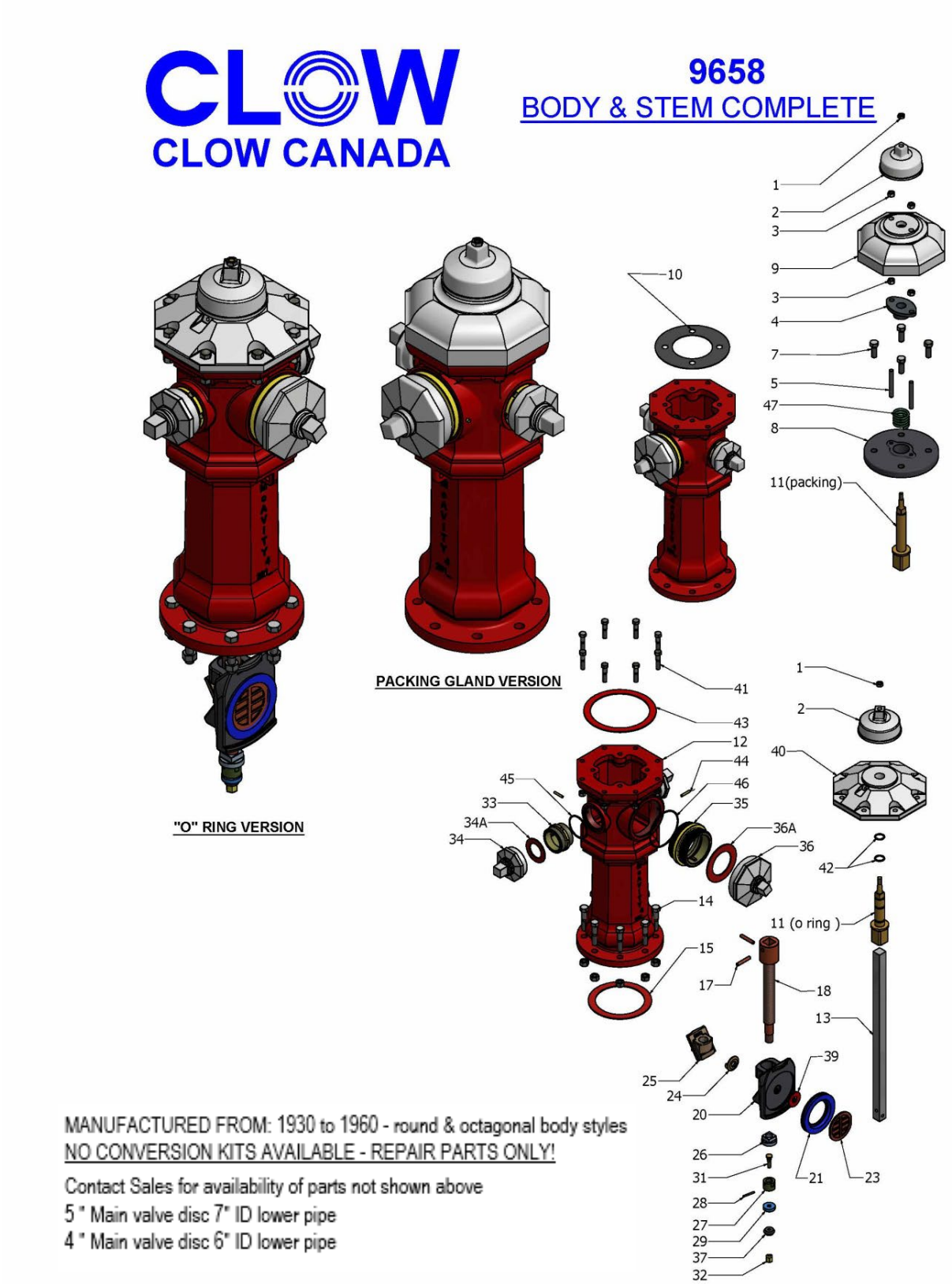

## McAvity M59M Parts List

| REF | DESCRIPTION | PRODUCT CODE |
|---|---|---|
| 1 | Grease Fitting | T8300325 |
| 2 | Oil Hole Screw | T8100131 |
| 3 | Discontinued See Part # 64 | Not Available |
| 4 | Operating Nut "O" Ring | T8100210 |
| 5 | Delrin Bearing | T8107035 |
| 6 | Housing Joint Gasket | T8107782 |
| 7 | Body Cap | M8300856 Oct M8300147 |
| 8 | Body Cap Gasket | T8300208 |
| 9 | Body Cap Nuts & Bolts | R8301270 |
| 10 | Housing Cap Screw | T8100032 |
| 11 | Hose Nozzle Cap | See Chart |
| 12 | Hose Cap Gasket | T8107473 |
| 13 | Nozzle Pin | F8100942 |
| 14 | Hose Nozzle | See Chart |
| 15 | Pumper Cap | See Chart |
| 16 | Pumper Cap Gasket | SM T8100243 |
| 17 | Pumper Nozzle | See Chart |
| 18 | Discontinued See Part #6&63 (Aka Cone) | |
| 19 | Housing Stem "O" Ring | T8100207 |
| 20 | Main Valve Stem 6'0" Bury | A8300867 |
| 21 | Upper Barrel | M8300853 Oct |
| 22 | Intersection Bolts & Nuts | R8103201 |
| 23 | Intersection Gasket | T8100240 |
| 24 | Lower Barrel 6'6" Bury | |
| 25 | Drip Valve Complete | F8100947 |
| 26 | Drip Valve Facing | M8300409 |
| 27 | Holding Clamp Screw | T8300407 |
| 29 | Drain Hole Lining | 1-13/32" T8100438 1-19/32" T8105965 |
| 30 | Seat Ring / Casing | Not Available |
| 31 | Main Valve Seat | F8100933 |
| 32 | Seat Casing "O" Ring | Not Available |
| 32a | Upper Seat "O" Ring (Not Shown) | T8100219 |
| 33 | Main Valve Rubber -Buna | T8100444 / Poly T8100445 |
| 34 | Main Valve Washer | M8100932 |
| 35 | Main Valve Locknut | F8100934 |
| 36 | Cotter Pin | T8100139 |
| 37 | Inlet Boot | See Table |
| 43 | Lower Seat "O" Ring | T8100218 |
| 45 | Main Valve "O" Ring | T8100206 |
| 46 | Drain Hole Plug 3/8 Brass | T8100921 |
| | Internal Plug 1/4 | T8100922 |

## McAvity M59M Drawing

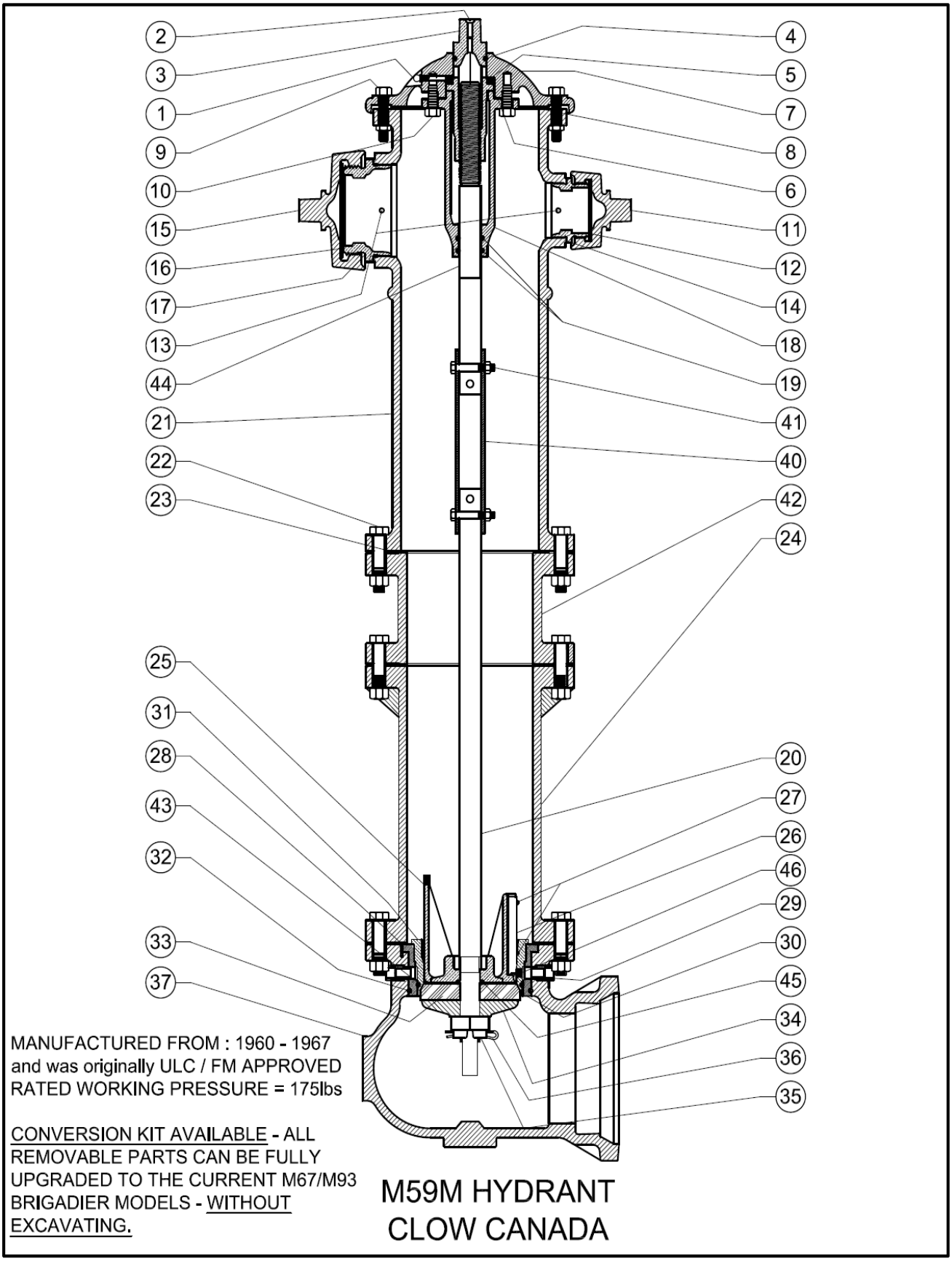

## Bibby Sentinel - Parts List

| REF | DESCRIPTION | PROUDUCT CODE |
|---|---|---|
| 1 | Operating Nut | O/L: F8202897 / O/R: TBA |
| 1A | Oil Hole Screw | T8100131 |
| 2 | Hold-Down Nut | F8202902 |
| 3 | Hold-Down Nut "O" Ring (I.D) | T8100224 |
| 4 | Hold-Down Nut "O" Ring (O.D) | T8100214 |
| 5 | Top Cap | O/L M8202906 / O/R M8203074 |
| 6 | Thrust Washer Top | T8202903 |
| 6A | Thrust Washer Bottom | T8202904 |
| 7 | Top Cap Gasket | T8202906 |
| 8 | Top Cap Bolts & Nuts | T8202934 / T8100002 |
| 9 | Top Cap "O" Rings | T8100207 |
| 10 | Pumper Cap Gasket | 4'' T8202919 / 4-1/2" T8202920 |
| 10A | Hose Cap Gasket | T8202921 |
| 11 | Pumper Nozzle "O" Ring | 4" T8200614 |
| 11A | Hose Nozzle "O" Ring | T8100214 |
| 12 | Pumper Cap | - |
| | Pumper Cap Storz | - |
| 12A | Hose Cap | - |
| 13 | Sleeve | - |
| 15 | Hose Cap Hook | |
| 16 | Pumper Nozzle | - |
| | Pumper Nozzle Storz | - |
| 16A | Hose Nozzle | - |
| 18 | Hose & Pumper Nozzle Set Screw | T8200607 |
| 19 | S-Hook | - |
| 20 | Upper Stem | O/L A8202910 / O/R A8203076 |
| 21 | Coupling Bolts and Nuts | R8203888 |
| 22 | Safety Coupling | M8202908 |
| 23 | Body Gasket | T8200581 |
| 24 | Flange Lock Ring | M8200441 - New # M8203029 - Old # |
| 25 | Break Flange | M8200476 - New # M8202909 - Old # |
| 26 | Intersection Bolts and Nuts | T8100016 / T8100072 |
| 27 | Lower Stem 6'0"Bury | |
| 28 | Intermediate Section 6'0" Bury | M8203457 |
| 29 | Drain Valve Facing | T8100443 |
| 30 | Holding Clamp (Retainer) | T8100442 |
| 31 | Main Valve Seat Upper "O" Ring | T8200588 |
| 32 | Lower Barrel Gasket | T8202907 |
| 33 | Main Valve Seat | F8202912 |
| | Drain Plug 1/4 or 3/8 | 1/4 T8202923 / 3/8 T8100480 |
| 34 | Bolt & Nut | T8100024 / T8100003 |
| 35 | Drain Hole Liner | |
| 36 | Main Valve Seat Lower O Ring | T8200589 |
| 37 | Drain Valve | F8202914 |
| 38 | Main Valve Disc | T8100445 |
| 39 | Lower Valve Plate | M8202924 |
| 40 | Elbow | |
| 41 | Upper Body 2H1P | 4" M8202880 / 4-1/2''-TBA |
| 42 | Machine Screws | T8100133 |
| 43 | Main Valve "O" Ring | T8100206 |
| 44 | Seat Ring | F8105154 |
| 46 | Floating Flange | M8200302 |

## Bibby Sentinel Drawing

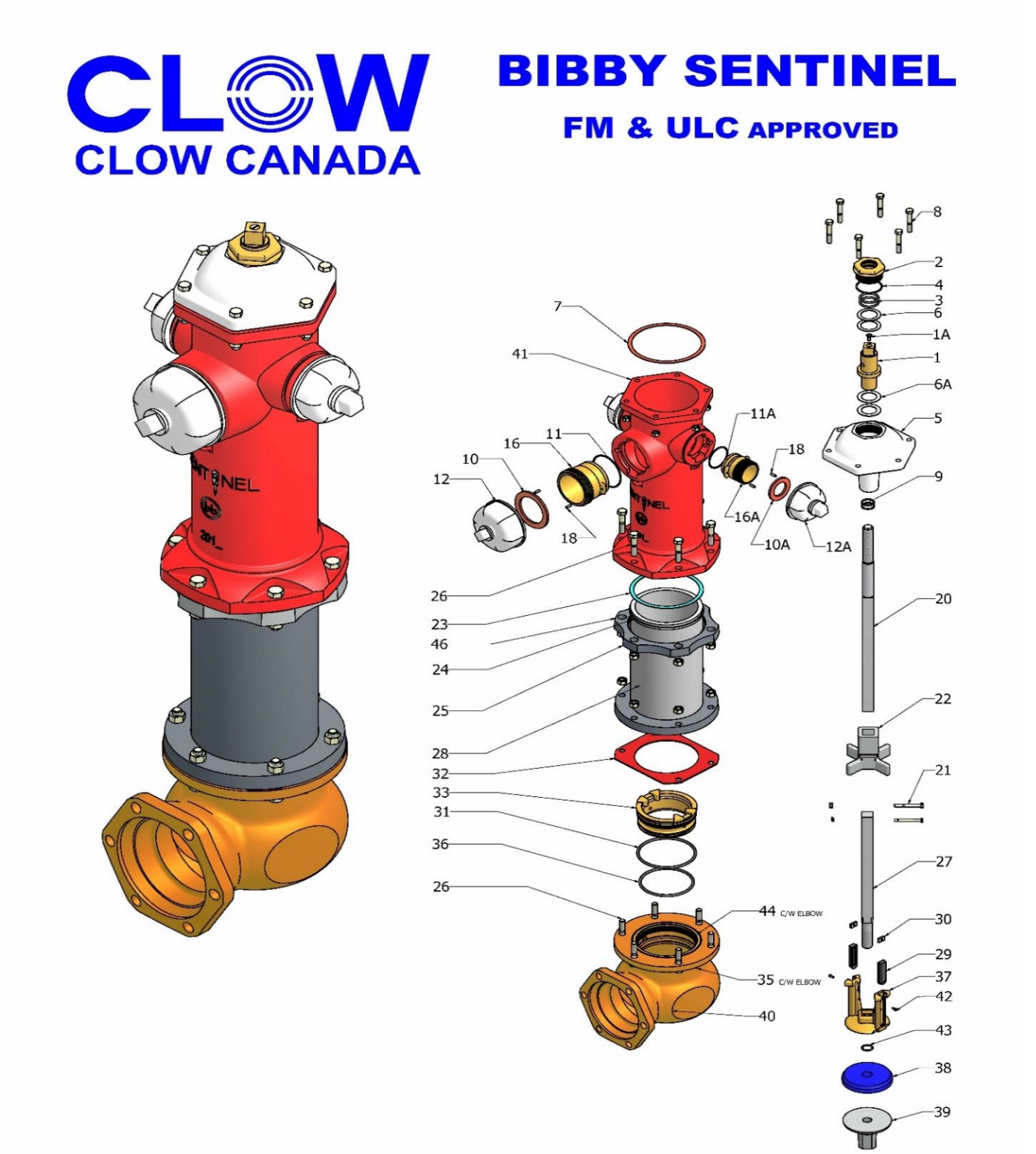

# HYDRANT PARTS

## Pumper Nozzles & Pumper Caps for any Clow Hydrant with Threaded Body Nozzle Connections

Fits M67 / M93 / Monitor Brigadier – McAvity M67 – D67M Premier – M59M – McAvity 9658 & 9651



| LETTER CODE | | NOZZLE PART'S NUMBER | PUMPER CAP 1-1/4"SQ | PUMPER CAP 1"- 5 | PUMPER CAP 7/8"- 5 | PUMPER CAP 1 - 1/2"-TRI. |
|---|---|---|---|---|---|---|
| AD | | F8105526 | | M8105527 | | |
| AJ | | F8101200 | M8104926 | | | |
| BD | | F8201795 | | M8202159 | | |
| BE | | F8100901 | M8101384 | | | |
| BF | | F8100896 | M8101374 | | | |
| CD | | F8101196 | M8101401 | | | |
| DG | | F8101182 | M8101358 | | | |
| DH | | F8104355 | M8104356 | | | |
| ED | | F8100906 | M8101403 | | M8300541 | M8105835 |
| EF | BC STD | F8100897 | M8101375 | M8101376 | | |
| EG | | F8105428 | M8101360 | | | |
| FD | | F8100907 | M8101404 | M8300379 | M8101407 | M8101406 |
| FE | | F8101187 | M8106000 | | M8105463 | |
| GD | | F8100908 | | | | |
| HD | | F8101197 | M8101409 | | | |
| HE | REGINA | F8101188 | M8101388 | | M8104903 | M8105424 |
| JF | WEST CANADA (MB/SK/AB) | F8100898 | M8101377 | | M8101378 | M8105014 |
| KD | | F8100909 | M8101410 | | M8105384 | |
| KE | | F8101189 | M8101389 | | | |
| KF | | F8100899 | M8101379 | | | |
| LE | | F8100902 | M8101390 | M8105280 | | |
| MF | | F8105246 | | M8105247 | | |
| ND | | F8105528 | M8105529 | | | |
| OD | | F8100910 | M8101413 | | | |
| OH | SASKATOON | F8101181 | M8101357 | | M8105170 | M8104907 |
| PD | EDM. / OTTAWA | F8101198 | M8101415 | M8101418 | M8104518 | M8101417 |
| PE | | F8101190 | | | | |
| PF | | F8100900 | M8101382 | | | |
| SD | NATIONAL STANDARD PUMPER | F8100911 | M8101420 | M8101427 | M8101425 | M8104970 |
| SF | | F8101184 | M8101383 | | M8105435 | |
| VD | | F8100912 | M8101428 | | | |
| VE | | F8100904 | M8101394 | M8101396 | | |
| VH | | F8104911 | | M8104910 | | |
| WD | CALGARY | F8100913 | M8101430 | | | |
| YE | | F8100905 | M8106043 | | | |
| PUMPER NOZZLE STORZ | | | | | | |
| ZG 4" | | F8100895 | M8101364 | M8101373 | M8101371 | M8101367 |
| ZI | | M8200299 | M8200309 | M8200311 | | M8200312 |
| ZH 5" | | F8105734 | T8105787 | T8105850 | T8105843 | T8105938 |

## Hose Nozzles & Caps

Fits M67 / M93 / Monitor Brigadier – McAvity M67 – D67M Premier – M59M – McAvity 9658 & 9651



| LETTER CODE | HOSE NOZZLE PART NUMBER | HOSE CAP 1 1/4"SQ | HOSE CAP 1"-5 | HOSE CAP 7/8"-5 | HOSE CAP 1 1/2"-3 | HOSE CAP 1 3/8"SQ |
|---|---|---|---|---|---|---|
| A | F8101523 | M8100987 | M8100988 | | M8101307 | |
| AA | F8101531 | M8100997 | | | | |
| B | F8104749 | M8104750 | M8104882 | M8104881 | M8104883 | |
| BB | F8104315 | M8104316 | | | | |
| CC | F8101532 | M8100998 | M8101333 | M8100999 | M8104969 | |
| D | F8101524 | M8100990 | M8100993 | | | |
| E | F8101525 | M8101315 | | M8101317 | | |
| F | F8101526 | | M8100995 | | | |
| JJ | F8101533 | M8101000 | M8101337 | | | |
| LL | F8101534 | M8101339 | | | | |
| NN | F8101535 | M8104339 | M8104921 | M8101340 | M8104905 | |
| SB | F8107791 | | | | | M8107790 |
| SS | F8101536 | ONTARIO:M8101342<br>SNOFL: M8101343 | M8101344 | M8104957 | M8300361 | |
| TT | F8101537 | M8101345 | M8101349 | | | M8107476 |
| VV | F8101538 | M8101350 | M8101354 | M8105413 | | M8101351 |
| Y | F8101529 | M8101324 | | | | |
| Z | F8101530 | M8101325 | | M8300403 | | |
| HOSE STORZ | | | | | | |
| O | F8104261 | M8104262 | M8104271 | M8104269 | M8104265 | M8104263 |
| | | | | | | |

## D67M / D67- Premier Variable Parts Options

| D67M - PREMIER HYDRALUBE OPERATING NUT #59 | | |
|---|---|---|
| NUT SHAPE | OPEN LEFT P/N | OPEN RIGHT P/N |
| 1-1/4" SQUARE | F8202731 | F8202736 |
| 1-1/2" 3 SIDED | F8202732 | F8202737 |
| 3/4" A/F PENTAGON | F8203450 | |
| 7/8 A/F PENTAGON | F8202734 | F8202739 |
| 1" A/F PENTAGON | F8202735 | F8202740 |

| LOWER STEM W/MAIN VALVE UNIT COMPLETE (Items 20,21,22,23,24,26,27,29,30,31,44&49) | |
|---|---|
| Product Code | Depth of Bury |
| R8204597 | 6' |
| R8204401 | 6'6" |
| R8204218 | 7' |
| | 7'6" |
| R8204591 | 8' |
| R8203709 | 8'6" |
| R8203823 | 9' |
| R8204076 | 9'6" |
| R8204026 | 10' |
| R8204592 | 10'6" |
| | 11' |
| | 11'6" |
| R8204515 | 12' |

| D67M #44 / D67M PREMIER #44 LOWER STEM - ONLY | HYDRANTS MADE BEFORE 2019 | HYDRANTS MADE AFTER 2019 | DEPTH OF BURY |
|---|---|---|---|
| D67M 1 1/4" X 5'-11 1/8"Lg Lower Stem For 6' Bury | M8200357 | M8204355 | 6' |
| D67M 1 1/4" X 6'-5 1/8"Lg Lower Stem For 6'6" Bury | M8200358 | M8204356 | 6'6" |
| D67M 1 1/4" X 6'-11 1/8"Lg Lower Stem For 7' Bury | M8200359 | M8204357 | 7' |
| D67M 1 1/4" X 7'-5 1/8"Lg Lower Stem For 7'6" Bury | M8200360 | M8204358 | 7'6" |
| D67M 1 1/4" X 7'-11 1/8"Lg Lower Stem For 8' Bury | M8200361 | M8204359 | 8' |
| D67M 1 1/4" X 8'-5 1/8"Lg Lower Stem For 8'-6" Bury | M8200362 | M8204360 | 8'6" |
| D67M 1 1/4" X 8'-11 1/8"Lg Lower Stem For 9' Bury | M8200363 | M8204361 | 9' |
| D67M 1 1/4" X 9'-5 1/8"Lg Lower Stem For 9'6" Bury | M8200364 | M8204362 | 9'6" |
| D67M 1 1/4" X 9'-11 1/8"Lg Lower Stem For 10' Bury | M8200365 | M8204363 | 10' |
| D67M 1 1/4" X 10'-5 1/8"Lg Lower Stem For 10'6" Bury | M8200366 | M8204364 | 10'6" |
| D67M 1 1/4" X 10'-11 1/8"Lg Lower Stem For 11' Bury | M8200367 | M8204365 | 11' |
| D67M 1 1/4" X 11'-5 1/8"Lg Lower Stem For 11'6" Bury | M8200368 | M8204366 | 11'6" |
| D67M 1 1/4" X 11'-11 1/8"Lg Lower Stem For 12' Bury | M8200369 | M8204367 | 12' |

| D67M #19 / D67M PREMIER #19 LOWER BARREL W/ FLANGES – ONLY | PRODUCT CODE | DEPTH OF BURY |
|---|---|---|
| D67M 5'3 1/4" Lower Pipe | A8204234 | 6' |
| D67M 6'9 1/4" Lower Pipe | A8204237 | 6'6" |
| D67M 6'3 1/4" Lower Pipe | A8204236 | 7' |
| D67M 7'9 1/4" Lower Pipe | A8204239 | 7'6" |
| D67M 8'3 1/4" Lower Pipe | A8204240 | 8' |
| D67M 8'9 1/4" Lower Pipe | A8204241 | 8'6" |
| D67M 9'3 1/4" Lower Pipe | A8204242 | 9' |
| D67M 9'9 1/4" Lower Pipe | A8204243 | 9'6" |
| D67M 10'3 1/4" Lower Pipe | A8204244 | 10' |
| D67M 10'9 1/4" Lower Pipe | A8204245 | 10'6" |
| D67M 11'3 1/4" Lower Pipe | A8204246 | 11' |
| D67M 11'9 1/4" Lower Pipe | A8204247 | 11'6" |
| D67M 12'3 1/4" Lower Pipe | A8204248 | 12' |

## M67 Brigadier / M67 Variable Parts Options

| M67 BRIGADIER #64 / McAVITY M67 #64 HYDRALUBE OPERATING NUT | | |
|---|---|---|
| NUT SHAPE | OPEN LEFT P/N | OPEN RIGHT P/N |
| 1-1/4" SQUARE | F8104760 | F8104768 |
| 1-1/2" 3 SIDED | F8104761 | F8104769 |
| 5/8" A/F PENTAGON | F8104762 | F8104770 |
| 3/4" A/F PENTAGON | F8104763 | F8104771 |
| 7/8" A/F PENTAGON | F8104765 | F8104773 |
| 1.00" A/F PENTAGON | F8104767 | F8104775 |

| LOWER STEM COMP W/DRIP VL; MV SEAT & L. VL PLATE (Items 29,31,34,34a,35,38,39,40,42,48,66,67 & 68) | |
|---|---|
| PRODUCT CODE | DEPTH OF BURY |
| R8107966 | 3'6" |
| R8109013 | 4' |
| R8108444 | 4'6" |
| | 5' |
| R8105831 | 5'6" |
| R8105817 | 6' |
| R8106356 | 6'6" |
| R8108589 | 7' |
| R8107017 | 7'6" |
| R8107110 | 8' |
| R8108452 | 8'6" |
| R8108221 | 9' |
| R8105645 | 9'6" |
| R8107645 | 10' |
| | 10'6" |
| R8107648 | 11' |
| R8108821 | 11'6" |
| R8107704 | 12' |

| M67 BRIGADIER #29 / McAVITY M67 #29 LOWER STEM | PRODUCT CODE | DEBTH OF BURY |
|---|---|---|
| M67 Lower Stem 5ft 9-15/16" | M8106766 | 6' |
| M67 Lower Stem 6ft 3-15/16" | M8106767 | 6'6" |
| M67 Lower Stem 6ft 9-15/16" | M8106768 | 7' |
| M67 Lower Stem 7ft 3-15/16" | M8106769 | 7'6" |
| M67 Lower Stem 7ft 9-15/16" | M8106770 | 8' |
| M67 Lower Stem 8ft 3-15/16" | M8106771 | 8'6" |
| M67 Lower Stem 8ft 9-15/16" | M8108058 | 9' |
| M67 Lower Stem 9ft 3-15/16" | M8108059 | 9'6" |
| M67 Lower Stem 9ft 9-15/16" | M8108052 | 10' |
| M67 Lower Stem 10ft 3-15/16" | M8108025 | 10'6" |
| M67 Lower Stem 10ft 9-15/16" | M8108053 | 11' |
| M67 Lower Stem 11ft 3-15/16" | M8108054 | 11'6" |
| M67 Lower Stem 11ft 9-15/16" | M8108055 | 12' |
| **M67 BRIGADIER / McAVITY M67 LOWER BARREL W/ FLANGES - ONLY** | **PRODUCT CODE** | **DEBTH OF BURY** |
| M67 Pipe Comp. 5'3" For 6' Bury Ductile | A8104110 | 6' |
| M67 Pipe Comp. 5'9" For 6'6"Bury Ductile | A8104111 | 6'6" |
| M67 Pipe Comp. 6'3" For 7'bury | A8104112 | 7' |
| M67 Pipe Comp. 6'9" For 7'6"Bury Ductile | A8104113 | 7'6" |
| M67 Pipe Comp. 7'3" For 8'bury Ductile | A8104114 | 8' |
| M67 Pipe Comp. 7'9" For 8'6" Bury Ductile | | 8'6" |
| M67 Pipe Comp. 8'3" For 9' Bury Ductile | A8104116 | 9' |
| M67 Pipe Comp. 8'9" For 9'-6" Bury Ductile | A8106413 | 9'6" |
| M67 Pipe Comp. 9'3" For 10'bury Ductile | A8104118 | 10' |
| M67 Pipe Comp. 9'9" For 10'6" Bury Ductile | | 10'6" |
| M67 Pipe Comp. 10'3" For 11'bury Ductile | A8106665 | 11' |
| M67 Pipe Comp. 10'9" For 11'6" Bury Ductile | | 11'6" |

## Fire Hydrants Extensions

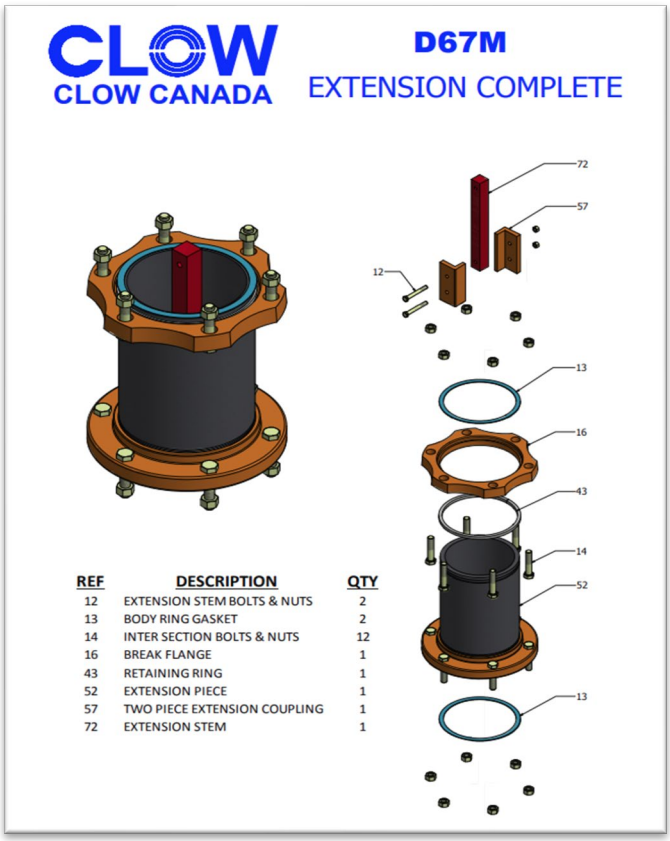

| D67M Premier / D67M - Standard 6 Hole Extension | | | |
|---|---|---|---|
| SIZE | REGULAR | SS B&N | SS B&N -EPOXY |
| 6" | R8202309 | R8202752 | R8204028 |
| 12" | R8202310 | R8202753 | R8204029 |
| 18" | R8202311 | R8202754 | R8204030 |
| 24" | R8202312 | R8202755 | R8204031 |
| 30" | R8202313 | R8202756 | R8204032 |
| 36" | R8202314 | R8202757 | R8204033 |
| 42" | R8202315 | - | R8204034 |
| 48" | R8202316 | R8202758 | R8204035 |

| M67 Brigadier / McAvity M67 / Heritage / Mon STD. 8 Hole Ext | | | |
|---|---|---|---|
| SIZE | REGULAR | SS B&N | SS B&N -EPOXY |
| 6" | R8101492 | R8104895 | R8107618 |
| 12" | R8101493 | R8104896 | R8107619 |
| 18" | R8101494 | R8104897 | R8107620 |
| 24" | R8101495 | R8104898 | R8107621 |
| 30" | R8101496 | R8105011 | R8107622 |
| 36" | R8101497 | R8104984 | R8107623 |
| 42" | R8101498 | R8105012 | R8107624 |
| 48" | R8101499 | R8105013 | R8107625 |

| Length | Barrel with Flanges | Stem & Coupling | M67/M93/M67 BRIGADIER & D67M - P /D67M EXTENSION STEMS | |
|---|---|---|---|---|
| | | (Parts 51,52 & 53) | M67 | D67 |
| 6" | R8101207 | R8101477 | M8100948 | M8202294 |
| 12" | R8101208 | R8101478 | M8100949 | M8202295 |
| 18" | R8101209 | R8101479 | M8100950 | M8202296 |
| 24" | R8101210 | R8101480 | M8100951 | M8202297 |
| 30" | R8101211 | R8101481 | M8100952 | M8202298 |
| 36" | R8100923 | R8101482 | M8100953 | M8202299 |
| 42" | R8101212 | R8101483 | M8100954 | M8202300 |
| 48" | R8101213 | R8101484 | M8100955 | M8202300 |

## Tools Required for Maintenance / Repairs

| HYDRANT TOOL | HYDRANT TOOL USE | PART NUMBER |
|---|---|---|
| **Operating Wrench** | Clow hydrant operating wrench – fits all nut sizes on any fire hydrant. | T8100310 |
| **Seat Removal Tool** | Clow Seat Removal Tool & Guide Plate for use on all McAvity hydrants dating back to 1967. | R8101516 |
| **Holding Nut** | The Holding Nut is for use on all CLOW / McAvity hydrants dating back to 1967. The Holding nut must be ordered specifically for either LEFT- or RIGHT- hand open hydrants. | OL: F8101518<br>OR: F8101517 |
| **M67 Body Cap Wrench** | Clow's Body Cap Wrench is for use on McAvity M67 fire hydrants with the treaded on bonnet | M8101541 |
| **Seat Thread Chaser** | For use on Clow's hydrants | R8300267 |
| **Storz Pumper Removal Tool** | Clow's Storz Pumper Nozzle Removal Tool is available for 4" & 5" Pumper Sizes.<br>The tool is designed for use on Clow Hydrants with Storz Pumper connections. | 4": R8103696<br>5": R8107510 |
| **Storz Nozzle Removal** | Clow's Storz Hose Nozzle Removal Tool is available for 2.5" Storz Hose size. | R8105328 |
| **Maintenance Grease** | Purity FG2 Synthetic grease is a food grade lubricant. Suited for Canadian climate. | T8106855 |
| **Hose Nozzle Wrench** | Clow's standard Hose Nozzle Wrench fits all sizes | R8100915 |
| **Pumper Nozzle Wrench** | Clow's standard Pumper Nozzle Wrench is available in 3 sizes. Size depends on letter code stamped on the pumper nozzle. Refer to grid below for letter reference. | S: R8100202<br>M: R8100916<br>L: R8100917 |



| LARGE | | MEDIUM | | | | SMALL | |
|---|---|---|---|---|---|---|---|
| VH | NF | OH | EG | JF | KF | AH | CH |
| PF | SF | FE | GE | HE | KE | DH | GH |
| XE | YE | LE | ME | OE | PE | BF | BE |
| ND | OD | CD | ED | FD | GD | DE | AJ |
| PD | SD | HD | KD | DG | EF | | |
| WD | YD | VE | MF | AD | BD | | |
| VD | | | | | | | |

## Hydrants Kits and Conversion Kits

"O" Ring kits required for annual maintenance.

| DESCRIPTION | PARTS USED IN KIT | PART NUMBER |
|---|---|---|
| **M67 / M93 Brig. Upper "O" Ring & Gasket Kit** | 4,65,12,6,9,79,17,61lg,61sm | R8108129 |
| **M67 / M93 Brig. Lower "O" Ring & Gasket Kit** | 34,34a,35,38,68,79,26 | R8108130 |
| **M67 Upper "O" Ring, Gasket & Screw Kit** | 9,12,6,15,4,10 | R8108131 |
| | | |
| **D67M-P Upper "O" Ring & Gasket Kit** | 2,5,7,9,36,65,36sm,36lg | R8204302 |
| **D67M-P Lower "O" Ring & Gasket Kit** | 25,27,30,24 | R8204203 |



Hydralube Operating Nut & Upper Stem Assembly / Conversion Kit

| TO UPGRADE - M67/MONITOR / HERITAGE HYDRANTS MANUFACTURED BEFORE 1995 | | TO UPGRADE – CONCORD D67 & D67M HYDRANTS MANUFACTURED BEFORE 1995 | |
|---|---|---|---|
| NUT SHAPE | PART NUMBER | NUT SHAPE | PART NUMBER |
| **1-1/4"SQ OL** | R8104869 | 1-1/4"SQ OL | R8202775 |
| **1"-5 OL** | R8104870 | 1"-5 OL | R8203395 |
| **1-1/2"R-3 OL** | R8104871 | 1-1/2"R-3 OL | R8202777 |
| **7/8"-5 OL** | R8104887 | 7/8"-5 OL | R8202778 |
| **M67 consists of part numbers: 4/ 6/7/9/12/13/15/26/28/63/64/65/70 SEE BOM** | | D67 Concord consists of part numbers: 5/7/12/13/59/60/61/74 SEE BOM | |

Click here for Hydrant Operation & Maintenance Manual

## Inlets Complete

All inlets include standard epoxy coating and are supplied as Cast Iron ASTM A126
Ductile iron inlets priced on request
Plugs (# 49a / # 75 below) not included
(NOTE: D67M Premier Flanged inlet uses pressed in seat ring)



| AVAILABLE INLET STYLES | AVAILABLE ON BRIGADIER ONLY | PART NUMBER |
|---|---|---|
| **150mm (6") Mechanical Joint (ANSI A-21.11)** | | M67: A8100927<br>D67: M8200284 |
| **200mm (8") Mechanical Joint (ANSI A-21.11)** | ✓ | M67: A8100928 |
| **150mm (6") flanged (ANSI B16.1 Class 125)** | | M67: A8100925<br>D67: A8200449 |
| **150mm (6") flanged (ANSI B16.1 Class 250)** | ✓ | M67: A8105704<br>M67 Flat Face: A8107365 |
| **150mm (6") Tyton (AWWA C111/A21.11)** | | M67: A8100926<br>D67: M8200287 |
| **200mm (8") Online chamber flanged (ANSI B16.1 Class 125) - for (AWWA C110 – 08) tee** | ✓ | M67: A8300286<br>M67 for Insulation Kit: A8105590 |
| **150mm (6") Online chamber flanged (ANSI B16.1 Class 125) - for (AWWA C110 – 08) tee** | ✓ | M67: A8105313<br>M67 for Insulation Kit: A8105536 |

Inlets Drawing

| M67 / M93 INLET COMPLETE DRAWING | D67M / D67M PREMIER INLET COMPLETE DRAWING |
|---|---|
| 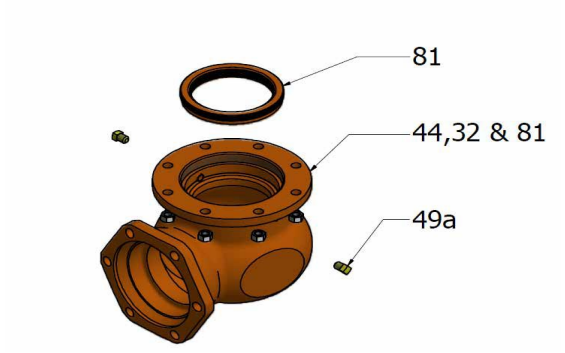 | 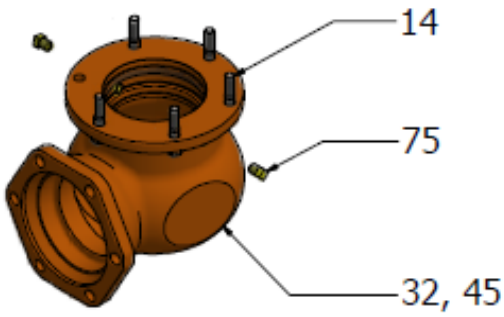 |

## M67B Upper & Lower Stem with Main Valve Kits Drawing

Assemblies below for current production hydrants only. Part number varies depending on depth of bury.



CLOW
CLOW CANADA

**M67B**

**UPPER & LOWER STEM W/MAIN VALVE UNIT COMPLETE**

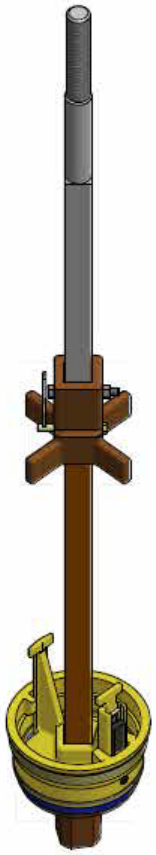

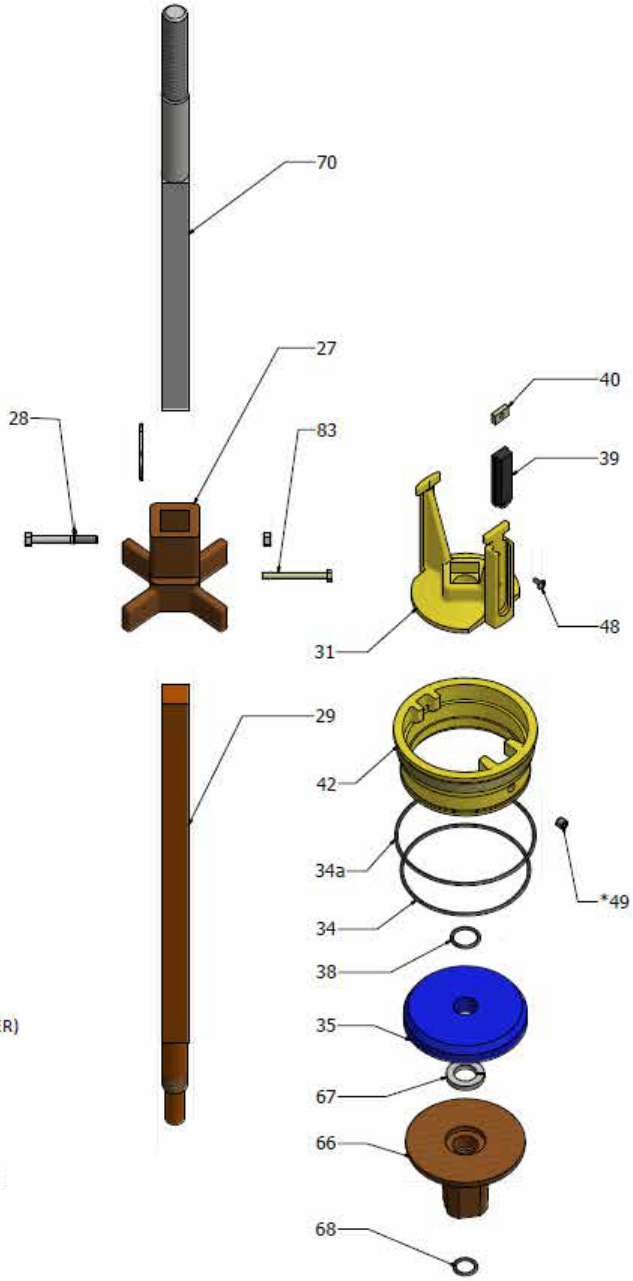


| REF# | DESCRIPTION |
|---|---|
| 27 | SAFETY COUPLING |
| 28 | SAFETY COUPLING BOLT & NUT |
| 29 | OPERATING STEM LOWER |
| 31 | DRIP VALVE |
| 34 | SEAT "O" RING BOTTOM |
| 34a | SEAT "O" RING TOP |
| 35 | MAIN VALVE DISC (POLY or BLACK RUBBER) |
| 38 | MAIN VALVE "O" RING |
| 39 | DRIP VALVE FACING |
| 40 | HOLDING CLAMP |
| 42 | MAIN VALVE SEAT |
| 48 | HOLDING CLAMP SCREW |
| 49 | OPTIONAL DRAIN INTERNAL DRAIN PLUG |
| 66 | LOWER VALVE PLATE |
| 67 | LOCKWASHER 1 1/8" |
| 68 | LOWER VALVE PLATE "O" RING |
| 70 | UPPER STEM |
| 83 | CLEVIS BOLT & PIN |

## D67M-P Upper & Lower Stem with Main Valve Kits Drawing

Assemblies below for current production hydrants only. Parts number varies depending on depth of bury.



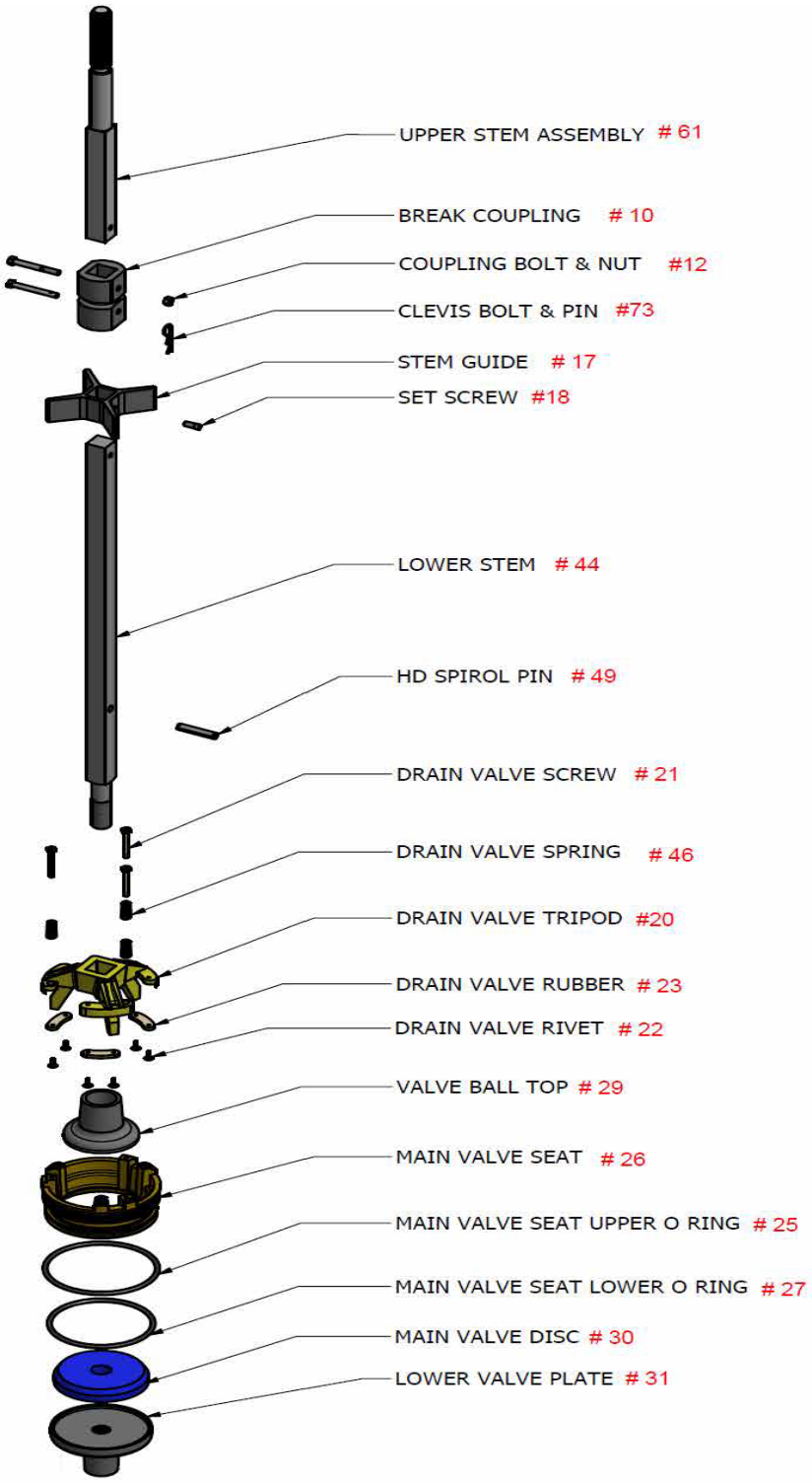


D67M-P UPPER & LOWER STEM ASSEMBLY
WITH MAIN VALVE UNIT

## **Bonnet Assemblies Drawings** – All Models for post 1967 Hydrants

Parts number varies depending on the operating nut size and opening orientation.

M67 / M93 Bolted Bonnet Complete - Item Description



| | | |
|---|---|---|
| 77 | Allen Screws or Hex Bolts | T8100149 |
| 7 | Oil Hole Screw | T8100131 |
| 78 | Body Cap | M8105175 OL |
| 12 | Operating Nut Bearing | T8107035 |
| 9 | Operating Nut ''O'' Ring | T8100210 |
| 6 | Housing Gasket | T8107782 |
| 64 | Hydralube Operating Nut | Depends on specs |
| 65 | Operating Nut ''O'' Ring | T8100211 |
| 4 | Housing Stem ''O'' Ring | T8100207 |
| 63 | Operating Nut Gland | M8104776 |
| 13 | Hex Bolt (1/2'' x 1 ¼'') | T8100032 |
| 79 | Body Cap Gasket ** Not Shown ** | T8200563 |

D67M Premier / D67M Bolted Bonnet Complete - Item Description

| | | |
|---|---|---|
| 34 | Bonnet Allen Screw | T8200594 |
| 2 | Bonnet Operating Nut ''O'' Ring | T8100224 |
| 3 | Bonnet | M8200233 OL |
| 5 | Operating Nut Bearing | T8107035 |
| 74 | Oil Hole Screw | T8100131 |
| 7 | Bonnet Gasket ** Not Shown ** | T8200563 |
| 59 | Hydralube Operating Nut | Depends on specs |
| 65 | Gland Operating Nut ''O'' Ring | T8100211 |
| 9 | Housing Operating Nut ''O'' Ring | T8100207 |
| 60 | Operating Nut Retaining Gland | M8202730 |

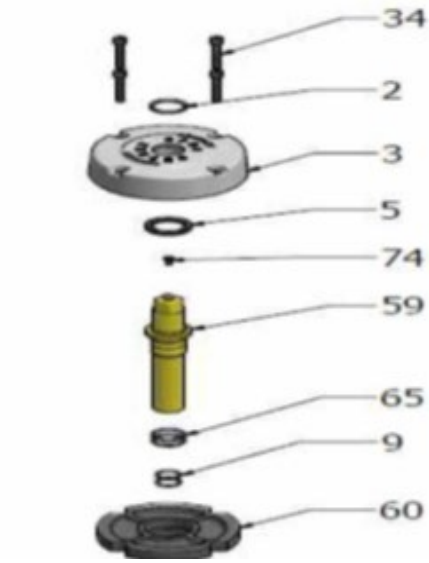

## Drip Valve & Seat Complete

McAvity M67 & M93 Brigadier

| ITEM # | P/N | DESCRIPTION |
|---|---|---|
| **42** | F8100933 | M67 Main V Seat #42 |
| **31,39,40,48** | F8100947 | M67 Drip Valve Complete - Assembly |
| **38** | T8100206 | "O" Ring #215 M67 Main Valve |
| **34** | T8100218 | "O" Ring #254 M67 Seat Lower |
| **34a** | T8100219 | "O" Ring M67 #258 Seat Upper |
| **All Items in drawing** | R8105458 | Drip Valve & Seat Complete - Assembly |

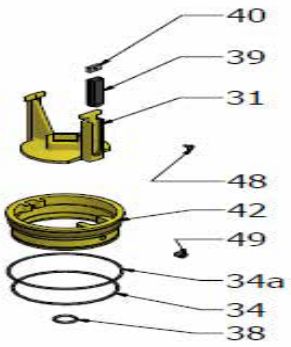




Concord D67M and D67M Premier

| P/N | Description |
|---|---|
| Assembly P/N: R8203542 | Drip Valve & Seat Complete (Part Number: 20,21,22,23,24,26,27&46) |
| Assembly P/N: A8202257 | Drip Valve / Tripod Complete (Part Number: 20,22,23) |

## Traffic Repairs Kits – With & Without Upper Stem

McAvity M67 & M93 Brigadier

| P/N | Description |
|---|---|
| R8101223 - Red R8106741 - Yellow | M67 /M67 & M93/ Brigadier - Traffic Repair Kit with Upper Stem |
| R8104148 - Red R8106742 -Yellow | M67 /M67 & M93/ Brigadier - Traffic Repair Kit without # 70 Upper Stem |

Concord D67M and D67M Premier

| P/N | Description |
|---|---|
| Assembly P/N: R8203447 | Assembly (With # 61 Upper Stem): R8203447 (Part Number: 10,12,13,14,16 & 61) |
| Assembly P/N: R8203438 | Assembly (Without # 61 Upper Stem): R8203438 (Part Number: 10,12,13,14 & 16) |

## Upper Body Complete – All Models (Assembly below for current production hydrants)

| Available styles | Available on Brigadier only |
|---|---|
| 2 Hose Body complete | |
| 2 Hose 1 Pumper Body complete | |
| 2 Hose - 100 mm (4" Storz) Pumper Body complete | |
| 2 Hose - 125 mm (5" Storz) Pumper Body complete | |
| 2 Hose ONLY ** Monitor ** Body complete | ✓ |
| 2 Hose 1 Pumper ** Monitor ** Body complete | ✓ |
| 2 Hose 100 mm (4" Storz) Pumper ** Monitor ** Body complete | ✓ |
| 2 Hose 125 mm (5" Storz) Pumper ** Monitor ** Body complete | ✓ |



CLOW
CLOW CANADA

**M67B**
**BODY COMPLETE**
**WITH UPPER STEM**

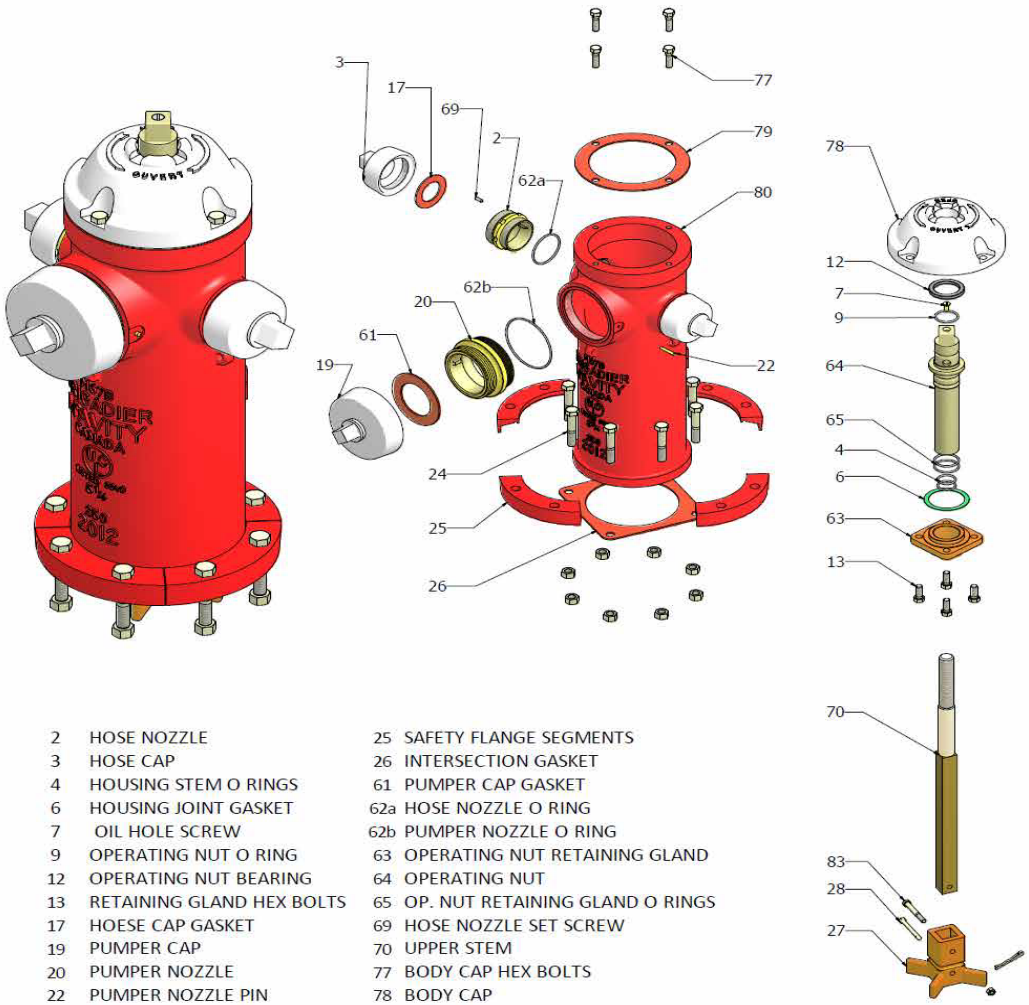


| | | | |
|---|---|---|---|
| 2 | HOSE NOZZLE | 25 | SAFETY FLANGE SEGMENTS |
| 3 | HOSE CAP | 26 | INTERSECTION GASKET |
| 4 | HOUSING STEM O RINGS | 61 | PUMPER CAP GASKET |
| 6 | HOUSING JOINT GASKET | 62a | HOSE NOZZLE O RING |
| 7 | OIL HOLE SCREW | 62b | PUMPER NOZZLE O RING |
| 9 | OPERATING NUT O RING | 63 | OPERATING NUT RETAINING GLAND |
| 12 | OPERATING NUT BEARING | 64 | OPERATING NUT |
| 13 | RETAINING GLAND HEX BOLTS | 65 | OP. NUT RETAINING GLAND O RINGS |
| 17 | HOESE CAP GASKET | 69 | HOSE NOZZLE SET SCREW |
| 19 | PUMPER CAP | 70 | UPPER STEM |
| 20 | PUMPER NOZZLE | 77 | BODY CAP HEX BOLTS |
| 22 | PUMPER NOZZLE PIN | 78 | BODY CAP |
| 24 | INTERSECTION BOLTS & NUTS | 79 | BODY CAP GASKET |

## Fitted Upper Barrel (Assembly below for current production hydrants)

| Available Styles | Available on Brigadier only |
|---|---|
| 2 Hose Body W/brass & caps | |
| 2 Hose 1 Pumper Body W/brass & caps | |
| 2 Hose - 100 mm (4" Storz) Pumper Body W/brass & caps | |
| 2 Hose - 125 mm (5" Storz) Pumper Body W/brass & caps | |
| 2 Hose ONLY ** Monitor ** Body W/brass & caps | ✓ |
| 2 Hose 1 Pumper ** Monitor ** Body W/brass & caps | ✓ |
| 2 Hose 100 mm (4" Storz) Pumper ** Monitor ** Body W/brass & caps | ✓ |
| 2 Hose 125 mm (5" Storz) Pumper ** Monitor ** Body W/brass & caps | ✓ |



| ITEM | DESCRIPTION |
|---|---|
| 2 | Hose Nozzle |
| 3 | Hose Nozzle Cap |
| | Hose Cap Gasket |
| *18 | Storz 100 mm Pumper Cap "o" Ring |
| 19 | Pumper Nozzle Cap |
| 20 | Pumper Nozzle |
| 22 | Pumper Nozzle Pin |
| 61 | Pumper Cap Gasket |
| 62a | Hose Nozzle "o" Ring |
| 62b | Pumper Nozzle "o" Ring |
| 69 | Hose Nozzle Set Screw |
| *72 | Storz 65 mm Hose Nozzle |
| *73 | Storz 65 mm Hose Cap "o" Ring |
| *74 | Storz 65 mm Hose Cap |
| *75 | Storz 100 mm Pumper Nozzle |
| *76 | Storz 100 mm Pumper Cap |

| ITEM | DESCRIPTION |
|---|---|
| 2 | Hose Nozzle |
| 3 | Hose Nozzle Cap |
| | Hose Cap Gasket |
| *18 | Storz 100 mm Pumper Cap "o" Ring |
| 19 | Pumper Nozzle Cap |
| 20 | Pumper Nozzle |
| 22 | Pumper Nozzle Pin |
| 61 | Pumper Cap Gasket |
| 62a | Hose Nozzle "o" Ring |
| 62b | Pumper Nozzle "o" Ring |
| 69 | Hose Nozzle Set Screw |
| *72 | Storz 65 mm Hose Nozzle |
| *73 | Storz 65 mm Hose Cap "o" Ring |
| *74 | Storz 65 mm Hose Cap |
| | |
| *75 | Storz 100 mm Pumper Nozzle |
| *76 | Storz 100 mm Pumper Cap |

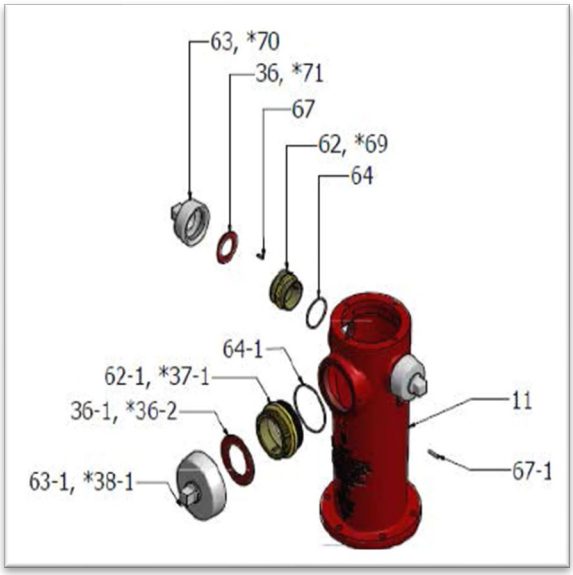

# RESILIENT WEDGE GATE VALVES

## Resilient Wedge Gate Valves - Product Codes Open Left

| | F6100 | F6106 | F6112 | F6113 |
|---|---|---|---|---|
| | MJ x MJ less MJ acc. | FLG x MJ less acc. | PO x PO with PO gasket | FLG x PO with PO gasket |
| 4 | 26390430117500 | 26390421117500 | 26390450117500 | 2639042H1175CW |
| 6 | 26390630117500 | 26390621117500 | 26390650117500 | 2639062H1175CW |
| 8 | 26390830117500 | 26390821117500 | 26390850117500 | 2639082H1175CW |
| 10 | 26391030117500 | 26391021117500 | 26391050117500 | 2639102H1175CW |
| 12 | 26391230117500 | 26391221117500 | 26391250117500 | 2639122H1175CW |



| | F6115 | F6115 | F6111 | |
|---|---|---|---|---|
| | MJ x TAP less MJ acc. | PO x TAP with PO gasket | One end Over. less acc. | |
| 4 | 26390431117500 | 2639042H1175CW | 26390435117500 | |
| 6 | 26390631117500 | 2639062H1175CW | 26390635117500 | |
| 8 | 26390831117500 | 2639082H1175CW | 26390835117500 | |
| 10 | 26391031117500 | 2639102H1175CW | 26391035117500 | |
| 12 | 26391231117500 | 2639122H1175CW | 26391235117500 | |

| | F6102 | F6102H | F6110 | F6103 |
|---|---|---|---|---|
| | FLG x FLG Op nut | FLG x FLG Handwheel | PO x PVC | Threaded |
| 2 | 26390220117500 | 263902201275CHW | 26390256117500 | 26390260117500 |
| 2 ½ | 26392D20117500 | 26392D20127CHW | 26392D56117500 | 26392D60117500 |
| 3 | 26390320117500 | 26390320127CHW | 26390356117500 | 26390360117500 |
| 4 | 26390420117500 | 263904201275CHW | 26390456117500 | |
| 6 | 26390620117500 | 263906201275CHW | 26390656117500 | |
| 8 | 26390820117500 | 263908201275CHW | 26390856117500 | |
| 10 | 26391020117500 | 263910201275CHW | 26391056117500 | |
| 12 | 26391220117500 | 263912201275CHW | 26391256117500 | |

## Fire Protection – Product Codes

| | OS&Y 8068 | PIV Gate Valve 8071 | PIV Gate Valve 8910 | PIV Gate Valve 8701 |
|---|---|---|---|---|
| | FLG x FLG | MJ | PO | FLG |
| 2 | 29300220150000 | | | |
| 2 ½ | 29302D20150000 | | | |
| 3 | 29300320150000 | 263903301175CAP | | 263903201175CAP |
| 4 | 29300420150000 | 263904301175CAP | 263904501175CAP | 263904201175CAP |
| 6 | 29300620150000 | 263906301175CAP | 263906501175CAP | 263906201175CAP |
| 8 | 29300820150000 | 263908301175CAP | 263908501175CAP | 263908201175CAP |
| 10 | 29301020150000 | 263910301175CAP | 263910501175CAP | 263910201175CAP |
| 12 | 29301220150000 | 263912301175CAP | 263912501175CAP | 263912201175CAP |

## Clow Resilient Wedge Gate Valve Parts 2" -4"

| ITEM # | DESCRIPTION | PART # 2" | PART # 2 ½" | PART # 3" | PART # 4" |
|---|---|---|---|---|---|
| R-1 | Hold Down Bolt | T8105747 | T8105747 | T8105747 | T8105747 |
| R-2 | Bolt Washer | T8100096 | T8100096 | T8100096 | T8100096 |
| R-3 | OP Nut OL | I0800122 | I0800122 | I0800006 | I0800006 |
| | OP Nut OR | I0800009 | I0800009 | I0800102 | I0800102 |
| | Handwheel OL | I0800047 | I0800047 | I0800042 | I0800042 |
| | Handwheel OR | I0800188 | I0800188 | I0800190 | I0800190 |
| R-4 | Follower Bolts | T0400338 | T0400175 | T0400338 | T8100069 |
| | Follower Nuts | T0400340 | T0400340 | T0400340 | T8100016 |
| R-5 | Follower Plate 2640 | M2401274 | M2401274 | M2401275 | M2401254 |
| R-6 | Stem "O" Ring | T2401269 | T2401269 | T2401242 | T8103905 |
| R-7 | Follower Plate "O" Ring | T2401270 | T2401270 | T8100225 | T8100225 |
| R-8 | Thrust Washer | T0200674 | T0200674 | T0200179 | T0200179 |
| R-9 | Stem OL (867) | F2202416 | F2202882 | F2202883 | F2202422 |
| | Stem OR (867) | F2202417 | F2202927 | F2202943 | F2202423 |
| R-10 | Cover Bolts | T8100066 | T8100066 | T8100066 | T8100066 |
| | Cover Nuts | T8100015 | T8100015 | T8100015 | T8100015 |
| R-11 | Cover | M0300968 | M0300969 | M0300947 | M0301002 |
| R-12 | Stem Nut OL | F2300587 | F2300587 | F2300557 | F2300557 |
| | Stem Nut OR | F2300588 | F2300588 | F2300558 | F2300558 |
| R-13 | Wedge | M0900411 | M0900412 | M0900413 | M0900457 |
| R-14 | Cover "O" Ring | T2401271 | T2401272 | T2401273 | T2401039 |
| R-15 | Body - Flange | M0103077 | M0103078 | M0103079 | M0102024 |
| | Body - MJ | M0103080 | | M0102030 | M0102025 |

## Clow Resilient Wedge Gate Valve Parts 6" -12"

| ITEM # | DESCRIPTION | PART # 6'' | PART # 8'' | PART # 10'' | PART # 12'' |
|---|---|---|---|---|---|
| R-1 | Hold Down Bolt | T8105518 | T8105518 | T8100065 | T8100065 |
| R-2 | Bolt Washer | T8100097 | T8100097 | T8100097 | T8100097 |
| R-3 | Op Nut OL | I0800105 | I0800097 | I0800100 | I0800100 |
| | Op Nut OR | I0800113 | I0800108 | I0800114 | I0800114 |
| | Hand Wheel OL | I0800091 | I0800013 | I0800017 | I0800017 |
| | Hand Wheel OR | I0800191 | I0800192 | I0800195 | I0800195 |
| R-4 | Follower Bolts | T8100070 | T8100070 | T8200982 | T8200982 |
| | Follower Nuts | T8100016 | T8100016 | T8100018 | T8100018 |
| R-5 | Follower Plate | M2401255 | M2401265 | M2401264 | M2401264 |
| R-6 | Stem "O" Ring | T8100205 | T8103906 | T8100207 | T8100207 |
| R-7 | Follower Plate "O" Ring | T2400197 | T2400197 | T2401004 | T2401004 |
| R-8 | Thrust Washer | T0200216 | T0200189 | T0200191 | T0200191 |
| R-9 | Stem OL (867) | F2202424 | F2202426 | F2202428 | F2202430 |
| | Stem OR (867) | F2202425 | F2202427 | F2202429 | F2202431 |
| R-10 | Cover Bolts | T8100071 | T8100072 | T8104189 | T8105233 |
| | Cover Nuts | T8100016 | T8100016 | T8100016 | T8100016 |
| R-11 | Cover | M0301003 | M0301004 | M0301005 | M0301006 |
| R-12 | Stem Nut OL | F2300549 | F2300555 | F2300553 | F2300553 |
| | Stem Nut OR | F2300550 | F2300556 | F2300554 | F2300554 |
| R-13 | Wedge | M0900458 | M0900459 | M0900417 | M0900418 |
| R-14 | Cover "O" Ring | T2401012 | T2401008 | T2400992 | T2400769 |
| R-15 | Body - Flange | M0101997 | M0102022 | M0102020 | M0102018 |
| | Body - MJ | M0103157 | M0103158 | M0102021 | M0102019 |

## Clow Resilient Wedge Gate Valve Parts 14" -16"

| ITEM # | DESCRIPTION | PART # 14" | PART # 16" |
|---|---|---|---|
| R-1 | Hold Down Bolt | T8100065 | T8100065 |
| R-2 | Bolt Washer | T8100097 | T8100097 |
| R-3 | Op Nut OL | I0800100 | I0800100 |
| | Op Nut OR | I0800114 | I0800114 |
| | Handwheel OL | I0800017 | I0800017 |
| | Handwheel OR | I0800195 | I0800195 |
| R-4 | Follower Bolts | T0400905 | T0400905 |
| | and Nuts | T0400381 | T0400381 |
| R-5 | Follower Plate | M2401316 | M2401316 |
| R-6 | Stem "O" Ring | T2401279 | T2401279 |
| R-7 | Follower Plate "O" Ring | T2401263 | T2401263 |
| R-8 | Thrust Washer | T0200669 | T0200669 |
| R-9 | Cover Bolts | T0400795 | T0400795 |
| | Cover Nuts | T0400409 | T0400409 |
| R-10 | Stem OL | F2202910 | F2202910 |
| | Stem OR | F2202925 | F2202925 |
| R-12 | Cover | M0300670 | M0300670 |
| R-13 | Cover "O" Ring | T2401280 | T2401280 |
| R-14 | Stem Nut OL | F2300593 | F2300593 |
| R-14 | Stem Nut OR | F2300606 | F2300606 |
| R-15 | Wedge | M0900442 | M0900442 |
| R-16 | Body - Flange | M0102426 | M0102228 |
| | Body - MJ | M0102425 | M0102227 |

| | | Gear Operators | Gear Operators | 14" - 36" Geared Valves 24" Diameter Handwheel | 14" - 36" Geared Valves 2" Square Nut |
|---|---|---|---|---|---|
| Size | Size | Spur/Gear P/N | Bevel/Gear P/N | | |
| 14" | 350mm | T1301206 | T1301205 | LHO: T0800751 | LHO: T0800749 |
| 16" | 400mm | T1301206 | T1301205 | RHO: T0800752 | RHO: T0800750 |
| 18" | 450mm | T1301208 | T1301207 | | |
| 20" | 500mm | T1301208 | T1301207 | | |
| 24" | 600mm | T1301208 | T1301207 | | |

## Non-Rising Stem Resilient Wedge Gage Valve Rebuild Kits

| DESCRIPTION | P/N |
|---|---|
| | |
| 2" NRS RW GV Rebuild Kit | R8108017 |
| 2 1/2" NRS RW GV Rebuild Kit | R8108018 |
| 3" NRS RW GV Rebuild Kit | R8108019 |
| 4" NRS RW GV Rebuild Kit | R8108020 |
| 6" NRS RW GV Rebuild Kit | R8108021 |
| 8" NRS RW GV Rebuild Kit | R8108022 |
| 10" NRS RW GV Rebuild Kit | R8108023 |
| 12" NRS RW GV Rebuild Kit | R8108024 |

| ITEM | KITS CONTENT | QTY |
|---|---|---|
| R6 | Stem "O" Ring | 3 |
| R7 | Follower Plate "O" Ring | 1 |
| R8 | Thrust Washer | 1 |
| R14 | Cover "O" Ring | 1 |
| R10 | SS Bolts | 4 |
| R10 | SS Nuts | 4 |



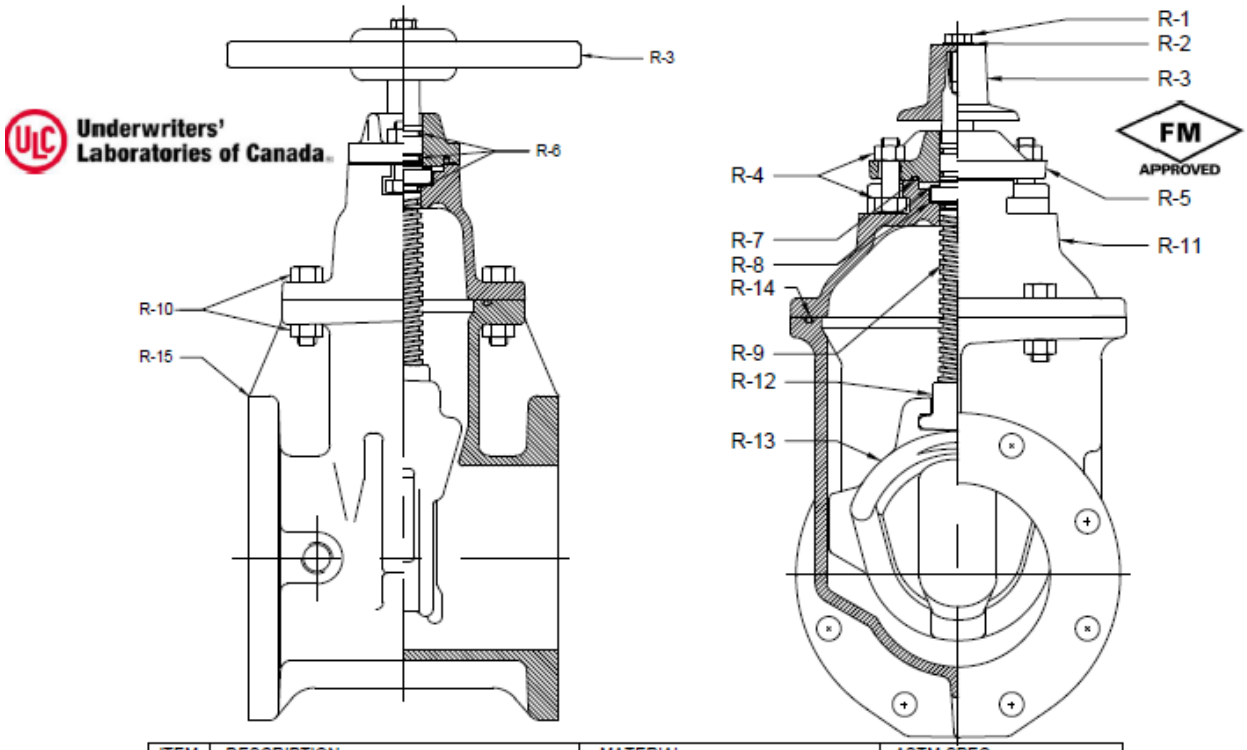


| ITEM | DESCRIPTION | MATERIAL | ASTM SPEC. |
|---|---|---|---|
| R-1 | HOLD DOWN BOLT | Stainless Steel | ASTM F 593 |
| R-2 | BOLT WASHER | Stainless Steel | ASTM F 593 |
| R-3 | OPERATING NUT or HANDWHEEL O/L or O/R | Gray Iron | ASTM A126 Cl B |
| R-4 | FOLLOWER BOLTS & NUTS | Stainless Steel | ASTM F 593 |
| R-5 | FOLLOWER PLATE 2640 | Cast Iron | ASTM 126-B |
| R-6 | STEM O-RING | Buna N | D 2000 |
| R-7 | FOLLOWER PLATE O-RING | Buna N | D 2000 |
| R-8 | THRUST WASHER | Delrin | DELRIN |
| R-9 | STEM O/L or O/R (867) | Bronze | ASTM B584 C86700 |
| R-10 | COVER BOLTS & NUTS | Stainless Steel | ASTM F 593 |
| R-11 | COVER | Gray Iron/Ductile | ASTM 126-B/A536 |
| R-12 | STEM NUT O/L or O/R | Bronze | ASTM B584 C83600 |
| R-13 | WEDGE | Gray Iron & SBR/Ductile SBR | ASTM 126-B/A536 |
| R-14 | COVER O RING | Buna N | D 2000 |
| R-15 | BODY (ALL TYPES) | Gray Iron/Ductile | ASTM 126-B/A536 |

# AWWA C504 Butterfly Valves

## M&H Model 4500 Class 150B / EPDM on 304 SS Seat / 2" Nut or Handwheel / Fusion Epoxy

| SIZE | | FLANGED ENDS Indicating | FLANGED ENDS Non-Indicating | MJ X MJ ENDS |
|---|---|---|---|---|
| | | | | |
| 4" | Op Nut / OL | 28450420130522 | 28450420130521 | 28450430130521 |
| 4" | Op Nut / OR | 28450420730522 | 28450420730521 | 28450430730521 |
| 4" | HW / OL | 28450420110522 | 28450420110521 | |
| 4" | HW /OR | 28450420710522 | 28450420710521 | |
| 6" | Op Nut / OL | 28450620130522 | 28450620130521 | 28450630130521 |
| 6" | Op Nut / OR | 28450620730522 | 28450620730521 | 28450630730521 |
| 6" | HW / OL | 28450620110522 | 28450620110521 | |
| 6" | HW /OR | 28450620710522 | 28450620710521 | |
| 8" | Op Nut / OL | 28450820130522 | 28450820130521 | 28450830130521 |
| 8" | Op Nut / OR | 28450820730522 | 28450820730522 | 28450830730521 |
| 8" | HW / OL | 28450820110522 | 28450820110521 | |
| 8" | HW /OR | 28450820710522 | 28450820710521 | |
| 10" | Op Nut / OL | 28451020130522 | 28451020130521 | 28451030130521 |
| 10" | Op Nut / OR | 28451020730522 | 28451020730521 | 28451030730521 |
| 10" | HW / OL | 28451020110522 | 28451020110521 | |
| 10" | HW /OR | 28451020710522 | 28451020710521 | |
| 12" | Op Nut / OL | 28451220130522 | 28451220130521 | 28451230130521 |
| 12" | Op Nut / OR | 28451220730522 | 28451220730521 | 28451230730521 |
| 12" | HW / OL | 28451220110522 | 28451220110521 | |
| 12" | HW /OR | 28451220710522 | 28451220710521 | |
| 14" | Op Nut / OL | 28451420130522 | 28451420130521 | 28451430130521 |
| 14" | Op Nut / OR | 28451420730522 | 28451420730521 | 28451430730521 |
| 14" | HW / OL | 28451420110522 | 28451420110521 | |
| 14" | HW /OR | 28451420710522 | 28451420710521 | |
| 16" | Op Nut / OL | 28451620130522 | 28451620130521 | 28451630130521 |
| 16" | Op Nut / OR | 28451620730522 | 28451620730521 | 28451630730521 |
| 16" | HW / OL | 28451620110522 | 28451620110521 | |
| 16" | HW /OR | 28451620710522 | 28451620710521 | |
| 18" | Op Nut / OL | 28451820130522 | 28451820130521 | 28451830130521 |
| 18" | Op Nut / OR | 28451820730522 | 28451820730521 | 28451830730521 |
| 18" | HW / OL | 28451820110522 | 28451820110521 | |
| 18" | HW /OR | 28451820710522 | 28451820710521 | |
| 20" | Op Nut / OL | 28452020130522 | 28452020130521 | 28452030130521 |
| 20" | Op Nut / OR | 28452020730522 | 28452020730521 | 28452030730521 |
| 20" | HW / OL | 28452020110522 | 28452020110521 | |
| 20" | HW /OR | 28452020710522 | 28452020710521 | |
| 24" | Op Nut / OL | 28452420130522 | 28452420130521 | 28452430130521 |
| 24" | Op Nut / OR | 28452420730522 | 28452420730521 | 28452430730521 |
| 24" | HW / OL | 28452420110522 | 28452420110521 | |
| 24" | HW /OR | 28452420710522 | 28452420710521 | |

# Services Boxes

| SIZE # | STANDARD | | STAINLESS / EPOXY | | FOR | ROD |
|---|---|---|---|---|---|---|
| | D-1 BOX | D-2 BOX | D-1SS | D-2SS | BURY | LENGTH |
| 2 | 003600101CT300 | 003600102CT300 | 003600101E0300 | 003600102E0300 | 2'0"-3'0" | 12" |
| 3 | 003600101CT350 | 003600102CT350 | 003600101E0350 | 003600102E0350 | 2'6"-3'6" | 12" |
| 4 | 003600101CT400 | 003600102CT400 | 003600101E0400 | 003600102E0400 | 3'0"-4'0" | 24" |
| 5 | 003600101CT450 | 003600102CT450 | 003600101E0450 | 003600102E0450 | 3'6"-4'6" | 24" |
| 6 | 003600101CT500 | 003600102CT500 | 003600101E0500 | 003600102E0500 | 4'0"-5'0" | 36" |
| 7 | 003600101CT550 | 003600102CT550 | 003600101E0550 | 003600102E0500 | 4'6"-5'6" | 36" |
| 8 | 003600101CT600 | 003600102CT600 | 003600101E0600 | 003600102E0600 | 5'0"-6'0" | 48" |
| 9 | 003600101CT650 | 003600102CT650 | 003600101E0650 | 003600102E0650 | 5'6"-6'6" | 48" |
| 10 | 003600101CT700 | 003600102CT700 | 003600101E0700 | 003600102E0700 | 6'0"-7'0" | 60" |
| 11 | 003600101CT750 | 003600102CT750 | 003600101E0750 | 003600102E0750 | 6'6"-7'6" | 60" |
| 12 | 003600101CT800 | 003600102CT800 | 003600101E0800 | 003600102E0800 | 7'0"-8'0" | 72" |
| 14 | 003600101CT900 | 003600102CT900 | 003600101E0900 | 003600102E0900 | 8'0"-9'0" | 84" |
| 16 | 003600101T1000 | | 0036001011000 | | 9'0"-10'0" | 96" |
| 18 | 003600101T1100 | | 003600101E1100 | | 10'-11' | 96" |



## Services Boxes Rods – SS Pins

| ROD LENGTH | T-5 | T-4 | T-2 |
|---|---|---|---|
| 12" | 0036T5012SS000 | 0036T4012SS000 | 0036T2012SS000 |
| 24" | 0036T5024SS000 | 0036T4024SS000 | 0036T2024SS000 |
| 36" | 0036T5036SS000 | 0036T4036SS000 | 0036T2036SS000 |
| 48" | 0036T5048SS000 | 0036T4048SS000 | 0036T2048SS000 |
| 60" | 0036T5060SS000 | 0036T4060SS000 | 0036T2060SS000 |
| 72" | 0036T5072SS000 | 0036T4072SS000 | 0036T2072SS000 |
| 84" | 0036T5084SS000 | 0036T4084SS000 | 0036T2084SS000 |
| 96" | 0036T5096SS000 | 0036T4096SS000 | 0036T2096SS000 |

## Services Boxes Accessories

| SERVICES BOX EXTENSIONS | | | | |
|---|---|---|---|---|
| C/W Male pipe thread & female socket and set screw | | | | |
| **D18 - 1" FIXED LENGTH** | **6"** | **12"** | **18"** | **24"** |
| | M8400623 | M8400624 | M8400625 | M8400626 |
| | **30"** | **36"** | **42"** | **48"** |
| | M8400627 | M8400628 | | |

| **D18A - 1 1/4" ADJUSTABLE** | **6"** | **12"** | **18"** | **24"** |
|---|---|---|---|---|
| | M8400633 | M8400634 | M8400635 | M8400636 |
| | **30"** | **36"** | **42"** | **48"** |

| **D12 COMBINATION KEYS** | | **30"** | **48"** | **60"** | **72"** |
|---|---|---|---|---|---|
| | | | A8400096 | A8400099 | A8400100 |
| **D13 STANDARD KEY** | | A8400103 | A8400103 | A8400103 | A8400103 |
| **D19 DOUBLE KEY** | 5" X 5" | M8400133 | | 10" X 10" | M8400134 |

| | | |
|---|---|---|
| **D10** | Regular Cover & Pentagon Plug | A8400222 |
| **D10F** | Flat Cover - 2 Hole - Bronze Bushing | T8400232 |
| **D10A** | Repair Cover with Set Screw & Plug | A8400247 |
| **D10D** | 1 1/4" Cover & Plug | A8400249 |
| **D10DR** | 1 1/4" Repair Cover with Set Screw & Plug | A8400250 |
| **D11** | Bronze Plug, Pentagon or Hexagon | T8400235 |
| **D11FR** | Frost Ring Washer | M8400212 |
| **D11CP** | Brass Cotter Pin | T8100134 |
| **D11B1** | Base For D-1 Box | T8400221 |
| **D11B2** | Base For D-2 Box | T8400239 |
| **D17** | Repair Coupling with Set Screws | M8400621 |
| **D17F** | Repair Coupling MIP X FIP with Set Screw | M8400632 |
| **D14** | Service Box Cleaner | R8400111 |

## Service Boxes Drawing

### CURB BOX LIDS

D-10 Regular ribbed cover and brass pentagon plug.

D-10A Ribbed repair cover c/w set screw and brass pentagon plug.

D-10D 1¼" ribbed cover and brass pentagon plug.

D-10DR 1¼" ribbed repair cover with set screw and brass pentagon plug.

D-10F Flat cover with 1" brass thread.

NOTE: Brass hexagon plugs available on all models if specified.

### CURB BOX PARTS

D-11 Brass pentagon or hexagon plug (specify)
Frost ring washer
Brass or stainless steel cotter pin
Base for D-1, D-6, cast iron
Base for D-1P, D-6P, polyethylene
Base for D-2, D-7, cast iron
Base for D-8, cast iron.

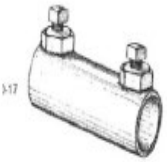

D-17 Standard repair coupling with two set screws.

D-17F Repair coupling with one female end threaded and one end with set screw.

D-18 Extensions 1" male end threaded and female end with set screw.
Fixed length—1" pipe.
6, 12, 18, 24, 30, 36, 42, 48 inches.

D-18A Same as above—1¼" pipe fully adjustable within each length.

### SHUT OFF KEYS

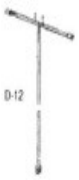


D-12 Combination Key
For flat lids, pentagon or hexagon plugs
Standard sizes: 30", 48", 60", 72"
Longer sizes available upon request.

D-13 Standard Key
Standard sizes: 30", 48", 60", 72"
Longer sizes available upon request.

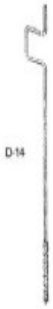


D-14 Service Box Cleaners
Eliminates digging up box to reach curb stop.

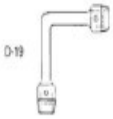


D-19 Double Key
5" x 5" or 10" x 10"
Fits pentagon and hexagon plug.

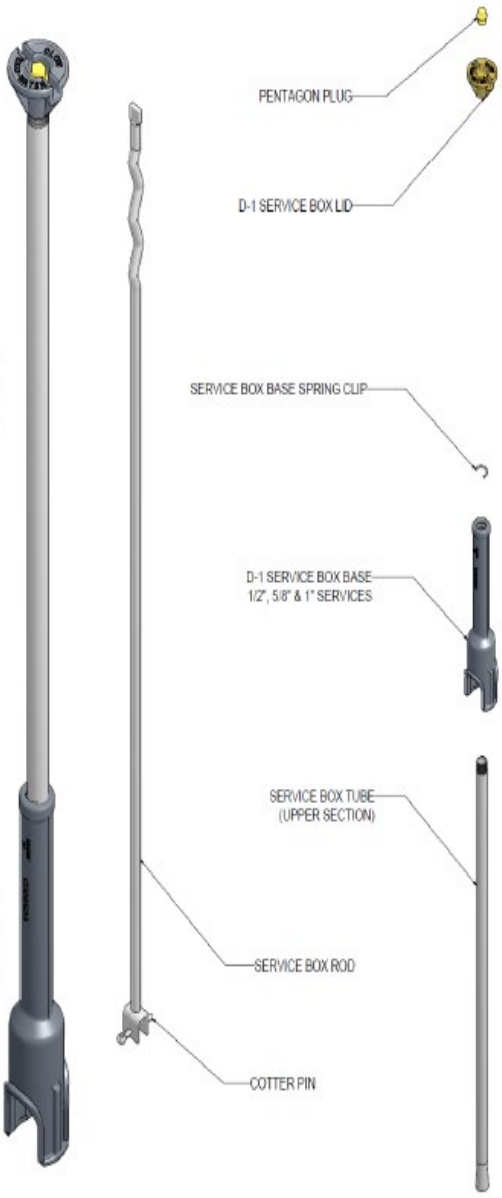

# 300 Series Harness Style Restraints

## 300C RESTRAINER KITS

| SIZE mm | Size | Regular - Clow P/N | SS - Clow P/N |
|---|---|---|---|
| 100mm | **4"** | 00371300C0400E | 00371300C040SE |
| 150mm | 6" | 00371300C0600E | 00371300C060SE |
| 200mm | **8"** | 00371300C0800E | 00371300C080SE |
| 250mm | 10" | 00371300C1000E | 00371300C100SE |
| 300mm | **12"** | 00371300C1200E | 00371300C120SE |
| 350mm | 14" | 00371300C1400E | 00371300C140SE |
| 400mm | **16"** | 00371300C1600E | 00371300C160SE |
| 450mm | 18" | 00371300C1800E | 00371300C180SE |
| 500mm | **20"** | 00371300C2000E | 00371300C200SE |
| 600mm | 24" | 00371300C2400E | 00371300C240SE |



## 360C RESTRAINER KITS

| SIZE mm | Size | Regular - Clow P/N | SS - Clow P/N |
|---|---|---|---|
| 100mm | **4"** | 00371360C0400E | 00371360C040SE |
| 150mm | 6" | 00371360C0600E | 00371360C060SE |
| 200mm | **8"** | 00371360C0800E | 00371360C080SE |
| 250mm | 10" | 00371360C1000E | 00371360C100SE |
| 300mm | **12"** | 00371360C1200E | 00371360C120SE |
| 350mm | 14" | 00371360C1400E | 00371360C140SE |
| 400mm | **16"** | 00371360C1600E | 00371360C160SE |
| 450mm | 18" | 00371360C1800E | 00371360C180SE |
| 500mm | **20"** | 00371360C2000E | 00371360C200SE |
| 600mm | 24" | 00371360C2400E | 00371360C240SE |

## 390C RESTRAINER KITS

| SIZE mm | Size | Regular - Clow P/N | SS - Clow P/N |
|---|---|---|---|
| 100mm | **4"** | 00371390C0400E | 00371390C040SE |
| 150mm | 6" | 00371390C0600E | 00371390C060SE |
| 200mm | **8"** | 00371390C0800E | 00371390C080SE |
| 250mm | 10" | 00371390C1000E | 00371390C100SE |
| 300mm | **12"** | 00371390C1200E | 00371390C120SE |
| 350mm | 14" | 0037130C1400E | 00371390C140SE |
| 400mm | **16"** | 00371390C1600E | 00371390C160SE |
| 450mm | 18" | 00371390C1800E | 00371390C180SE |
| 500mm | **20"** | 00371390C2000E | 00371390C200SE |
| 600mm | 24" | 00371390C2400E | 00371390C240SE |

## 300 Series Harness Style Restraints – Product details

**4" - 12" - 300 SERIES RESTRAINERS ARE:**
**- EPOXY COATED FOR PVC PIPE WITH DUCTILE IRON O.D.**
**- FM APPROVED (4" - 12" ONLY)**
**- CERTIFIED TO UNIBELL B-13-92 AND ASTM FI 674-96**
**- SUITABLE FOR C-900 & C-907 PVC PIPE**



| PRODUCT DETAILS 300 | | | |
|---|---|---|---|
| 4" - 12" | 300 Small Diameter | 14" - 24" | 300 Large Diameter |
| | | | |
| **PRODUCT DETAILS 360** | | | |
| 4" - 12" | 360 Small Diameter | 14" - 24" | 360 Large Diameter |
| | | | |
| **PRODUCT DETAILS 390** | | | |
| 4" - 12" | 390 Small Diameter | 14" - 24" | 390 Large Diameter |

### 300 Series Harness Style Restraint Rings Only

| SIZE mm | Size | Clow P/N (STD. B&N) | Clow P/N (304SS B&N) |
|---|---|---|---|
| 100mm | 4" | A8401417 | A8401561 |
| 150mm | 6" | A8401418 | A8401562 |
| 200mm | 8" | A8401419 | A8401563 |
| 250mm | 10" | A8401420 | A8401564 |
| 300mm | 12" | A8401421 | A8401565 |
| 350mm | 14" | A8401422 | A8401586 |
| 400mm | 16" | A8401423 | A8401587 |
| 450mm | 18" | - | A8401588 |
| 500mm | 20" | - | A8401589 |
| 600mm | 24" | - | A8401590 |

### 360 Series Harness Style Restraint Rings Only

| SIZE mm | Size | Clow P/N (STD. B&N) | Clow P/N (304SS B&N) |
|---|---|---|---|
| 100mm | 4" | A8401277 | - |
| 150mm | 6" | A8401278 | - |
| 200mm | 8" | A8401279 | - |
| 250mm | 10" | A8401280 | - |
| 300mm | 12" | A8401281 | - |
| 350mm | 14" | A8401317 | - |
| 400mm | 16" | A8401318 | A8401654 |
| 450mm | 18" | A8401319 | - |
| 500mm | 20" | A8401521 | A8401661 |
| 600mm | 24" | - | A8401662 |

# TUFGrip

## TUFGrip Dual Wedge Mechanical Joint Restraint Gland Only

| SIZE | | CLOW P/N |
|---|---|---|
| 100mm | 4" | 670610602000 |
| 150mm | **6"** | 670610602005 |
| 200mm | 8" | 670610602010 |
| 250mm | **10"** | 670610602015 |
| 300mm | 12" | 670610602020 |
| 350mm | **14"** | 670610602025 |
| 400mm | 16" | 670610602030 |
| 450mm | **18"** | 670610602035 |
| 500mm | 20" | 670610602040 |
| 600mm | **24"** | 670610602045 |



## TUFGrip Dual Wedge Mechanical Joint Restraint Complete Kit

| SIZE | | CLOW P/N |
|---|---|---|
| 100mm | **4"** | 670610602200 |
| 150mm | 6" | 670610602205 |
| 200mm | **8"** | 670610602210 |
| 250mm | 10" | 670610602215 |
| 300mm | **12"** | 670610602220 |
| 350mm | 14" | 670610602225 |
| 400mm | **16"** | 670610602230 |
| 450mm | 18" | 670610602235 |
| 500mm | **20"** | 670610602240 |
| 600mm | 24" | 670610602245 |

**For Ductile or PVC Pipe:** Tuff Grip Dual Wedge

## Series 40C Flange Adaptors for DUCTILE IRON PIPE

| SIZE | | |
|---|---|---|
| 100mm | **4"** | T8400265 |
| 150mm | 6" | T8400266 |
| 200mm | **8"** | T8400267 |
| 250mm | 10" | T8400268 |
| 300mm | **12"** | T8400269 |
| 350mm | 14" | |
| 400mm | **16"** | |
| 450mm | 18" | |
| 500mm | **20"** | |
| 600mm | 24" | |

## Series 90C Flange Adaptors for PVC Pipe

| SIZE | | |
|---|---|---|
| s100mm | **4"** | 00370900C0400E |
| 150mm | 6" | 00370900C0600E |
| 200mm | **8"** | 00370900C0800E |
| 250mm | 10" | 00370900C1000E |
| 300mm | **12"** | 00370900C1200E |

**For Detailed Information:** Ductile Flange Adaptors

**For Detailed Information:** PVC Flange Adaptors

# D50 Sewer Saddles

| | 4" BRANCH | | 5" BRANCH | | 6" BRANCH | |
|---|---|---|---|---|---|---|
| | AC | PVC | PVC | AC | AC | PVC |
| "O" Ring Diameter | 1/4" | 13/32" | 1/4" | 13/32" | 1/4" | 13/32" |
| D50 for 8"-12" Main | 0032D504081225 | 0032D504081240 | 0032D505081225 | 0032D505081240 | 0032D506081225 | 0032D506081240 |
| D50 for 14"-20" Main | 0032D504142025 | 0032D504142040 | 0032D505142025 | 0032D505142040 | 0032D506142025 | 0032D506142040 |
| D50 Less Strap | | | | | | 0032D506000040 |

AC= ASBESTOS CEMENT



## D50 Parts and "O" Rings

| DESCRIPTION | P/N | | | BRANCH/"O" RINGDIA. | | P/N |
|---|---|---|---|---|---|---|
| SS Hex Bolt | T8202704 | | | **4" Outlet 1/4"** | | T8200791 |
| Nut | T8200809 | | | 4" Outlet 5/16" | | T8200792 |
| Rocker Washer | T8200787 | | | **4" Outlet 13/32"** | | T8200793 |
| T Head Rocker | T8200703 | | | 5" Outlet 1/4" | | T8200794 |
| 45" SS Strap | T8200788 | | | **5" Outlet 5/16"** | | |
| 72" SS Strap | T8200789 | | | 5" Outlet 13/32" | | T8200795 |
| 100' Roll SS Strap | T8200790 | | | **6" Outlet 1/4"** | | T8200796 |
| | | | | 6" Outlet 5/16" | | T8200797 |
| | | | | **6" Outlet 13/32"** | | T8200798 |

**Detailed Product Information:** Sewer Saddles

# Daig-O-Per Tapping Machine

| | | | |
|---|---|---|---|
| **D-73-1** | **3/4"&1"** | **Standard Machine Complete** | |
| **D-73-2** | **1-1/4"- 2"** | **Standard Machine Complete** | |
| **D-73-12** | | **Both Standard Machines One Case** | |



## Replacement Parts

| REPLACEMENT PARTS | | | | |
|---|---|---|---|---|
| **D-73-1** | **P/N** | **D-73-2** | **P/N** | **DESCRIPTION** |
| #7301 | R8201046 | #7320 | F8201050 | Barrel |
| #7302 | M8201047 | #7302 | M8201047 | Feed Tube |
| #7303 | R8201134 | #7303 | R8201134 | Thrust Bearing & Plates |
| #7304 | F8201048 | #7304 | F8201048 | Feed Tube Handle |
| #7305 | M8201049 | #7305 | M8201049 | Stem Drive Nut |
| #7306 | M8201094 | #7321 | M8201051 | Stem |
| #7307 | T8201136 | #7322 | T8100205 | Ring |
| #7308 | T8201209 | #7323 | T8201211 | Allen Screw |
| #7309 | T8201137 | #7309 | T8201137 | "O" Ring |
| #7310 | T8201210 | #7324 | T8201212 | Allen Key |
| #7311 | M8201096 | #7311 | M8201096 | Wrench |
| #7312 | T8201138 | #7312 | T8201138 | Ratchet |
| #7314 | T8201140 | #7314 | T8201140 | Carry Case |
| #7313 | T8201139 | #7313 | T8201139 | Socket |

**Detailed Product Information:**

**PVC:** Daig-o-per PVC
**DUCTILE:** Daig-o-per Ductile

## Daig-O-Per Tapping Machine and Parts
## Optional Equipment

FOR DRILLING DUCTILE

| BLADES | CLOW P/N | SIZE |
|---|---|---|
| **#7331** | T8201141 | **3/4"** |
| **#7332** | T8201142 | 1" |
| **#7333** | T8201143 | **1-1/4"** |
| **#7334** | T8201146 | 1-1/2" |
| **#7335** | T8201144 | **2"** |
| **FEMALE ADAPTERS** | | |
| **#7371** | F8201054 | **3/4"** |
| **#7372** | F8201106 | 1" |
| **#7373** | F8201055 | **1-1/4"** |
| **#7374** | F8201107 | 1-1/2" |
| **#7375** | F8201056 | **2"** |
| **#7374MS** | F8201108 | 1-1/2" |
| **#7375MS** | F8201109 | **2"** |
| **IPT MALE ADAPTERS** | | |
| **#7351** | F8201104 | **3/4"** |
| **#7352** | F8201105 | 1" |
| **#7353** | F8201053 | **1-1/4"** |
| **#7354** | F8201100 | 1-1/2" |
| **WWT MALE ADAPTERS** | | |
| **#7361** | F8201052 | **3/4"** |
| **#7362** | F8203600 | 1" |
| **STEM EXTENSIONS** | | |
| **#7386** | M8201116 | **2-1/4"** |
| **#7387** | M8201117 | 3-3/4" |
| **#7388** | M8201118 | **4-1/2"** |

FOR DRILLING PVC

| CUTTER | CLOW P/N | SIZE |
|---|---|---|
| **#7394** | T8201147 | **3/4"** |
| **#7395** | T8201148 | 1" |
| **#7396** | T8201149 | **1-1/4"** |
| **#7397** | T8201150 | 1-1/2" |
| **#7398** | T8201151 | **2"** |
| **FEMALE ADAPTERS** | | |
| **#7376** | F8201057 | **3/4"** |
| **#7376L** | F8202851 | 3/4"L |
| **#7377** | F8201110 | **1"** |
| **#7377L** | F8202852 | 1"L |
| **#7378** | F8201111 | **1-1/4"** |
| **#7379** | F8201058 | 1-1/2" |
| **#7380** | F8201059 | **2"** |
| **#7379MS** | F8201113 | 1-1/2" |
| **#7380MS** | F8201114 | **2"** |

**MS - used with compression main stops**
**L - long body used with short neck saddles**

| PVC CONVERSION STEMS | | |
|---|---|---|
| **#7306-1** | M8201095 | **3/4"&1"** |
| #7321-1 | M8201097 | 1-1/4&1-1/2 |
| **#7385** | M8201115 | **2"** |

# Clow Canada ULC/FM Indicator Posts List

## Indicator Posts 2945A

Kennedy / Clow 2945A (Bury Range B Through E) Telescoping Indicator Post (3 - 14" valve) ULC / FM approved



| BURY CODE | 160lbs / 71" | 190lbs / 89" | 219lbs / 107" | 256 lbs / 137" |
|---|---|---|---|---|
| | B | C | D | E |
| | #2945410B701662 | #2945410C701665 | #2945410D701668 | #2945410E701683 |

**Bury = Distance from Bottom of Connecting Pipe to Finished Grade**

| Valve size | | Bury Range (Ft / Metres) | Bury Range (Ft / Metres) | Bury Range (Ft / Metres) | Bury Range (Ft / Metres) |
|---|---|---|---|---|---|
| 3" | | 2'5"-4'1"/ 0.76-1.25 | 3'8"-5'6"/1.16-1.7 | 5'4"-7'3"/1.64-2.24 | 7'4"-9'4"/2.25-2.86 |
| 4" | | 2'7"- 4'3"/ 0.79-1.30 | 4'0"- 5'8"/ 1.23-1.73 | 5'6"- 7'5"/ 1.68- 2.28 | 7'6"- 9'6"/ 2.29-2.9 |
| 6" | | 2'11"- 4'7"/ 0.89-1.40 | 4'5"- 6'1"/ 1.32-1.85 | 5'11"- 7'10"/ 1.80-2.40 | 7'11"- 9'11"/ 2.41-3.02 |
| 8" | | 3'4"- 5'0"/ 1.02-1.52 | 4'10"- 6'6"/ 1.47-1.98 | 6'4"- 8'3"/ 1.93- 2.53 | 8'4"-10'4"/ 2.54-3.15 |
| 10" | | 3'9"- 5'5"/ 1.14-1.65 | 5'3"- 6'11"/1.60-2.12 | 6'9"- 8'8"/1.60- 2.66 | 8'9"- 10'8"/ 2.67-3.25 |
| 12" | | 4'1"- 5'9"/ 1.24-1.75 | 5'7"- 7'3"/ 1.70-2.21 | 7'1"- 9'0"/ 2.16- 2.76 | 9'1"- 11'1"/ 2.77-3.38 |
| 14" | | 4' 10"-6'6"/1.47-1.98 | 6'4"-8'0"/1.93-2.44 | 7'10"-9'9"/2.39-2.98 | 9'10"-11'10"/2.99-3.6 |

**BROCHURE:** ALL IND. POSTS **PRODUCT DATA:** DRAWINGS **SUPERVISORY:** DRAWINGS

Contact Inside Sales for information on Heavy Duty Posts and Heavy-Duty Gear Indicator Posts and Consult link above for brochure.

## McAVITY Indicator Posts Extensions

| 2945 A EXTENSIONS | | | 2945 HD / HDG EXTENSIONS | |
|---|---|---|---|---|
| Bury | Complete P/N | Stem & Coupling P/N | Bury | Complete P/N |
| **12"** | R8101749 | R8101726 | **12"** | R8107209 |
| 18" | R8101750 | R8101725 | 18" | R8107212 |
| **24"** | R8101751 | R8101721 | **24"** | R8106153 |
| 30" | R8101752 | R8101724 | 30" | |
| **36"** | R8101753 | R8101727 | **36"** | R8105402 |
| 42" | R8101754 | R8101719 | 42" | R8105403 |
| **48"** | R8101755 | R8101718 | **48"** | R8105156 |



**Product Information:** IP extension instructions

## Post Indicator Parts

| PART # | QTY. | DESCRIPTION | | P/N 2945A | USED ON HD | USED ON HDG |
|---|---|---|---|---|---|---|
| **P-1** | **1** | **LOCKING WRENCH** | | I1800441 | **X** | |
| P-2 | 1 | OPERATING NUT | | T2202487 | | |
| **P-3** | **1** | **RETAINER "O" RING** | | T8100212 | | |
| P-4 | 1 | TOP SECTION | | T8190234 | | |
| **P-5** | **1** | **WINDOW GLASS** | | T1800443 | | |
| P-6 | 1 | OPEN TARGET | | T1800105 | | |
| **P-7** | **1** | **SHUT TARGET** | | T1800107 | | |
| P-8 | 1 | TARGET CARRIER ASSEMBLY | | R8106197 | | |
| **P-9** | **1** | **1/2" NPT PIPE PLUG** | | T8100197 | **X** | **X** |
| P-10 | 1 | 3/8" EYEBOLT | | T8105363 | **X** | **X** |
| P-11 | | **3/8" - 16 X1" HEX CAPSCREW** | | T8100029 | **X** | **X** |
| P-12 | 1 | STEM 1" SQUARE | | | | |
| **P-13** | **1** | **COUPLING** | | M8105364 | **X** | **X** |
| P-14 | 1 | COTTER PIN | | T8400438 | **X** | **X** |
| **P-15** | **2** | **3/4"HEX HEAD SCREW** | | T8100154 | **X** | **X** |
| P-16 | 1 | TELESCOPING BARREL | | M8104479 | **X** | **X** |
| **P-17** | **1** | **LOWER STANDPIPE** | | | | |
| P-18 | 1 | BASE FLANGE | | T8104463 | **X** | **X** |
| **P-19** | **3** | **3/4" HEX HEAD SCREW** | | | **X** | **X** |
| P-20 | 4 | 5/8" X 2 1/4" HEX CAPSCREW | | T8100040 | **X** | **X** |
| **P-21** | **4** | **5/8" HEX NUT** | | T8100003 | **X** | **X** |
| | 1 | TOP SECTION ASS. 1-15(exl.10,11&12) | | T8105365 | | |
| | | **CAP & BODY COMPLETE** | | R8105656 | | |